COUNTRYSIDE GLASS & MIRROR

ARMOR WALL SINGLE SPAN CURTAIN WALL SYSTEM
CS3000 VERSION 23 (WZ3) (IMPACT)

INSTALLATION NOTES:

1. SEE SHEETS 11 - 14 FOR ANCHOR QUANTITY REQUIREMENTS AND CAPACITIES.
2. THE NUMBER OF INSTALLATION ANCHORS DEPICTED IS THE MINIMUM NUMBER OF ANCHORS TO BE USED FOR PRODUCT INSTALLATION OF THE MAXIMUM SIZE LISTED.
3. INSTALL INDIVIDUAL INSTALLATION ANCHORS WITHIN A TOLERANCE OF ±1/2 INCH THE DEPICTED LOCATION & SPACING IN THE ANCHOR LAYOUT DETAILS (I.E., WITHOUT CONSIDERATION OF TOLERANCES). TOLERANCES ARE NOT CUMULATIVE FROM ONE INSTALLATION ANCHOR TO THE NEXT.
4. SHIM AS REQUIRED AT EACH INSTALLATION ANCHOR WITH LOAD BEARING SHIM(S). MAXIMUM ALLOWABLE SHIM STACK TO BE 1 INCH FOR THROUGH FRAME INSTALLATION AND 1/4" FOR ANCHOR CLIP INSTALLATION. SHIM WHERE SPACE OF 1/16 INCH OR GREATER OCCURS. SHIM(S) SHALL BE CONSTRUCTED OF HIGH DENSITY PLASTIC OR BETTER.
5. FOR MASONRY OR CONCRETE OPENINGS, 1X WOOD BUCK MAY BE USED (OPTIONAL) AS LONG AS THE MINIMUM EMBEDMENT AND EDGE DISTANCE REQUIREMENTS ARE STILL MET WITHIN THE CORRESPONDING HOST SUBSTRATE. SEE GENERAL NOTE #3 ON SHEET 1 FOR MORE INFORMATION.
6. MINIMUM EMBEDMENT AND EDGE DISTANCE EXCLUDE WALL FINISHES, INCLUDING BUT NOT LIMITED TO STUCCO, FOAM, BRICK VENEER, AND SIDING.
7. INSTALLATION ANCHORS AND ASSOCIATED HARDWARE MUST BE MADE OF CORROSION RESISTANT MATERIAL OR HAVE A CORROSION RESISTANT COATING.
8. FOR HOLLOW BLOCK AND GROUT FILLED BLOCK, DO NOT INSTALL INSTALLATION ANCHORS INTO MORTAR JOINTS. EDGE DISTANCE IS MEASURED FROM FREE EDGE OF BLOCK OR EDGE OF MORTAR JOINT INTO FACE SHELL OF BLOCK.
9. INSTALLATION ANCHORS SHALL BE INSTALLED IN ACCORDANCE WITH ANCHOR MANUFACTURER'S INSTALLATION INSTRUCTIONS, AND ANCHORS SHALL NOT BE USED IN SUBSTRATES WITH STRENGTHS LESS THAN THE MINIMUM STRENGTH SPECIFIED BY THE ANCHOR MANUFACTURER.

INSTRUCTIONS:

USE CHARTS AS FOLLOWS.

STEP 1 DETERMINE DESIGN WIND LOAD REQUIREMENT BASED ON WIND VELOCITY, BLDG. HEIGHT, WIND ZONE USING APPLICABLE ASCE 7 STANDARD.

STEP 2 SEE CHART ON SHEET 7 FOR DESIGN LOAD CAPACITY OF DESIRED GLASS SIZE.

STEP 3 CHECK MULLION CAPACITY FOR A GIVEN SPACING, HEIGHT, TWIN SPAN ON SHEET 8.

STEP 4 USING HEAD/SILL ANCHOR DETAILS, SELECT ANCHOR OPTION FROM TABLES ON SHEETS 11 - 14 WITH DESIGN RATING MORE THAN DESIGN LOAD SPECIFIED IN STEP 1 ABOVE.

STEP 5 THE LOWEST VALUE RESULTING FROM STEPS 2, 3 AND 4 SHALL APPLY TO ENTIRE SYSTEM.

GENERAL NOTES:

1. THE PRODUCT SHOWN HEREIN IS DESIGNED AND MANUFACTURED TO COMPLY WITH THE CURRENT FLORIDA BUILDING CODE, **EXCLUDING** REQUIREMENTS FOR HVHZ.
2. ADEQUACY OF THE EXISTING STRUCTURAL CONCRETE/MASONRY, 2X AND STEEL STUD FRAMING AS A MAIN WIND FORCE RESISTING SYSTEM CAPABLE OF WITHSTANDING AND TRANSFERRING APPLIED PRODUCT LOADS TO THE FOUNDATION IS THE RESPONSIBILITY OF THE ENGINEER OR ARCHITECT OF RECORD FOR THE PROJECT OF INSTALLATION.
3. 2X BUCKS (WHEN USED) SHALL BE DESIGNED AND ANCHORED TO PROPERLY TRANSFER ALL LOADS TO THE STRUCTURE. BUCK DESIGN AND THE INSTALLATION IS THE RESPONSIBILITY OF THE ENGINEER OR ARCHITECT OF RECORD FOR THE PROJECT OF INSTALLATION.
4. THE INSTALLATION DETAILS DESCRIBED HEREIN ARE GENERIC AND MAY NOT REFLECT ACTUAL CONDITIONS FOR A SPECIFIC SITE. IF SITE CONDITION CAUSE INSTALLATION TO DEVIATE FROM THE REQUIREMENTS DETAILED HEREIN, A LICENSED ENGINEER OR ARCHITECT SHALL PREPARE SITE SPECIFIC DOCUMENTS FOR USE WITH THIS DOCUMENT.
5. THIS PRODUCT **DOES NOT** REQUIRE AN IMPACT PROTECTIVE DEVICE WHEN USED IN WINDBORNE DEBRIS AREAS IN WIND ZONE 3 OR LESS.
6. THIS PRODUCT **DOES** REQUIRE AN IMPACT PROTECTIVE DEVICE WHEN USED IN WINDBORNE DEBRIS AREAS IN WIND ZONE 4.
7. MATERIALS INCLUDING BUT NOT LIMITED TO STEEL/METAL SCREWS, THAT COME INTO CONTACT WITH OTHER DISSIMILAR MATERIALS SHALL MEET THE REQUIREMENTS OF THE CURRENT FLORIDA BUILDING CODE.

TABLE OF CONTENTS

SHEET	SHEET DESCRIPTION
1	GENERAL NOTES, INSTALLATION NOTES & INSTRUCTIONS
2	SINGLE SPAN ELEVATION
3	VERTICAL SECTIONS
4	HORIZONTAL SECTIONS
5	HORIZONTAL SECTIONS
6	HORIZONTAL SECTIONS
7	GLAZING DETAILS & GLASS CAPACITY CHARTS
8	VERTICAL MULLION CAPACITIES
9	HORIZONTAL MULLION CAPACITIES
10	ANCHOR SCHEDULE
11	THROUGH FRAME ANCHOR CAPACITY CHARTS & DIAGRAMS
12	THROUGH FRAME ANCHOR CAPACITY CHARTS & DIAGRAMS
13	CLIP ANCHOR CAPACITY CHARTS & DIAGRAMS
14	CLIP ANCHOR CAPACITY CHARTS & DIAGRAMS
15	CONSTRUCTION DETAILS
16	COMPONENTS & BILL OF MATERIALS

Countryside Glass & Mirror
COUNTRYSIDE GLASS & MIRROR, INC.
2650 GANDY BLVD NORTH.
ST. PETERSBURG, FL 33702
PH: (727)738-6000 FAX: (727)738-6100

TITLE: *COUNTRYSIDE ARMOR WALL SINGLE SPAN SYSTEM CS3000 VERSION 23 (WZ3)(IMPACT)*
GENERAL NOTES, INSTALLATION NOTES & INSTRUCTIONS

PREPARED BY:
BUILDING DROPS, INC.
1900 NE MIAMI COURT, SUITE 2-15
MIAMI, FL 33132
PH: (954)399-8478
FAX: (954)744.4738
WEB: www.buildingdrops.com

REMARKS	BY	DATE

THE INSTALLATION DETAILS DESCRIBED HERE IN ARE GENERIC AND MAY NOT REFLECT ACTUAL CONDITIONS FOR A SPECIFIC SITE. IF SITE CONDITIONS CAUSE INSTALLATION TO DEVIATE FROM THE REQUIREMENTS DETAILED HEREIN, A LICENSED ENGINEER OR ARCHITECT SHALL PREPARE SITE SPECIFIC DOCUMENTS FOR USE WITH THIS DOCUMENT.

Digitally signed by Hermes F. Norero, P.E.
Reason: I am approving this document
Date: 2024.08.29 12:24:54 -04'00'

HERMES F. NORERO LICENSE No. 73778 STATE OF FLORIDA PROFESSIONAL ENGINEER

HERMES F. NORERO, P.E.
FLORIDA P.E. No. 73778
BUILDING DROPS, INC
1900 NE MIAMI COURT, SUITE 2-15
MIAMI, FL 33132
FBPE CERT. OF AUTHORIZATION No. 29578

FL #: FL31183
DATE: 08.19.24
DWG. BY: SH
CHK. BY: HFN
SCALE: NTS
DWG. #: CGM015
SHEET: 1 OF 16

8/28/2024 4:44 PM
c:\users\sebastianherreros\building drops, inc\building drops landing - common\projects\countryside glass & mirror, inc\fbc-23-0564 - fl31183 revision - armorwall curtain wall\dwgs\final\cgm015.dwg

8/28/2024 4:44 PM
c:\users\sebastianherreros\building drops, inc\building drops landing - common\projects\countryside glass & mirror, inc\fbc-23-0564 - fl31183 revision - armorwall curtain wall\dwgs\final\cgm015.dwg

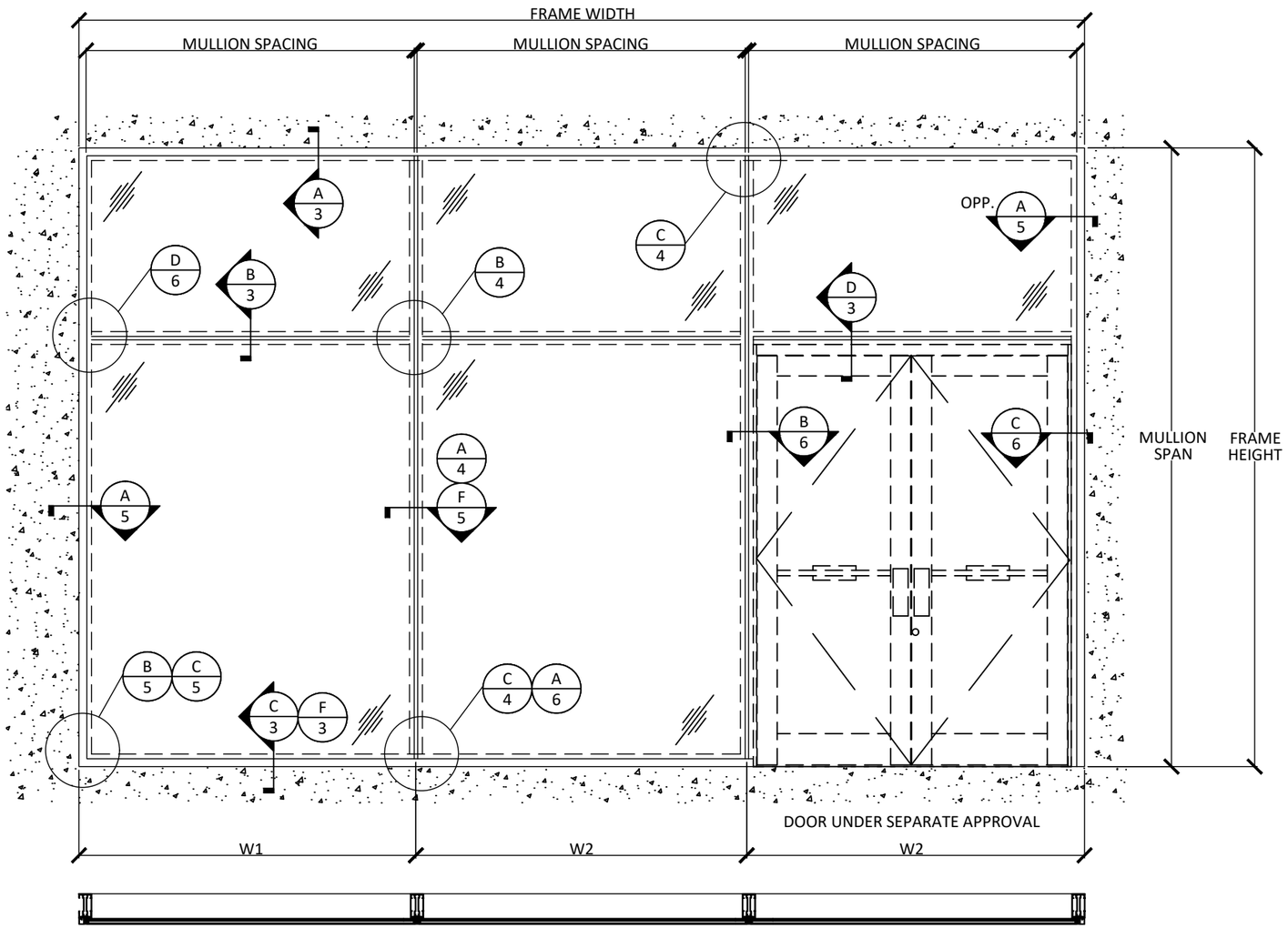

AVERAGE MULLION SPACING

TYP. MULL (W) = $\frac{W1}{2} + \frac{W2}{2}$

JAMB MULL (W) = W1

ELEVATION SHOWN IS FOR DIAGRAMMATIC PURPOSES ONLY. VARIOUS CONFIGURATIONS ARE POSSIBLE USING THIS APPROVAL AND DESIGN PRESSURE CHARTS WITHIN.

Countryside Glass & Mirror
COUNTRYSIDE GLASS & MIRROR, INC.
2650 GANDY BLVD NORTH.
ST. PETERSBURG, FL 33702
PH: (727)738-6000 FAX: (727)738-6100

TITLE: *COUNTRYSIDE ARMOR WALL SINGLE SPAN SYSTEM CS3000 VERSION 23 (WZ3)(IMPACT)*
TWIN SPAN OPENING ELEVATION

PREPARED BY:
BUILDING DROPS, INC.
1900 NE MIAMI COURT, SUITE 2-15
MIAMI, FL 33132
PH: (954)399-8478
FAX: (954)744.4738
WEB: www.buildingdrops.com

REMARKS	BY	DATE

THE INSTALLATION DETAILS DESCRIBED HERE IN ARE GENERIC AND MAY NOT REFLECT ACTUAL CONDITIONS FOR A SPECIFIC SITE. IF SITE CONDITIONS CAUSE INSTALLATION TO DEVIATE FROM THE REQUIREMENTS DETAILED HEREIN, A LICENSED ENGINEER OR ARCHITECT SHALL PREPARE SITE SPECIFIC DOCUMENTS FOR USE WITH THIS DOCUMENT.

HERMES F. NORERO LICENSE No. 73778 STATE OF FLORIDA PROFESSIONAL ENGINEER

HERMES F. NORERO, P.E.
FLORIDA P.E. No. 73778
BUILDING DROPS, INC
1900 NE MIAMI COURT, SUITE 2-15
MIAMI, FL 33132
FBPE CERT. OF AUTHORIZATION No. 29578

FL #: FL31183

DATE: 08.19.24

DWG. BY: SH | CHK. BY: HFN

SCALE: NTS

DWG. #: CGM015

SHEET: 2 OF 16

8/28/2024 4:44 PM
c:\users\sebastianherreros\building drops, inc\building drops landing - common\projects\countryside glass & mirror, inc\fbc-23-0564 - fl31183 revision - armorwall curtain wall\dwgs\final\cgm015.dwg

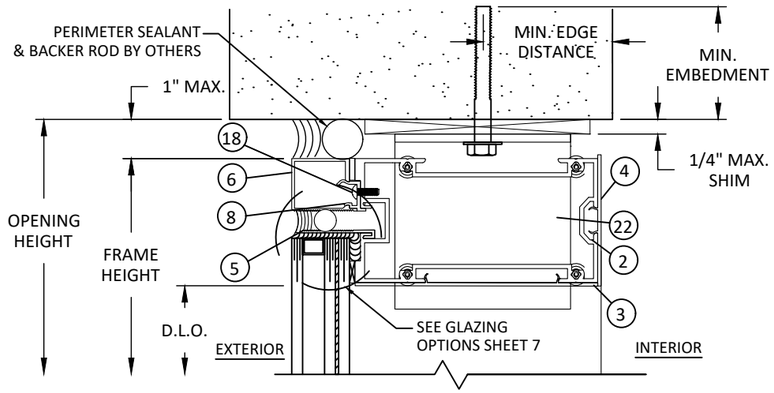

A/3 VERTICAL SECTION

HEAD - INSULATED GLASS

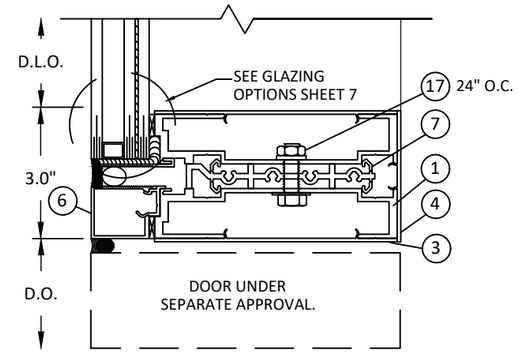

D/3 VERTICAL SECTION

HORIZONTAL MULLION - DOOR HEAD CONNECTION - INSULATED GLASS

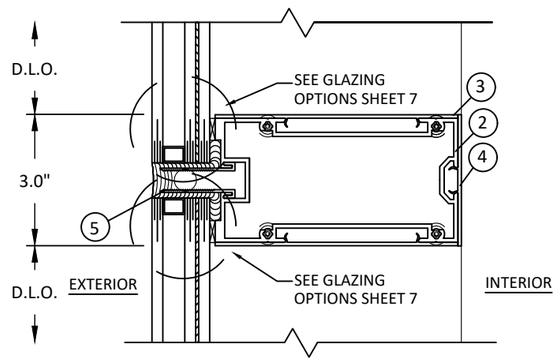

B/3 VERTICAL SECTION

HORIZONTAL INTEGRATED MULLION - INSULATED GLASS

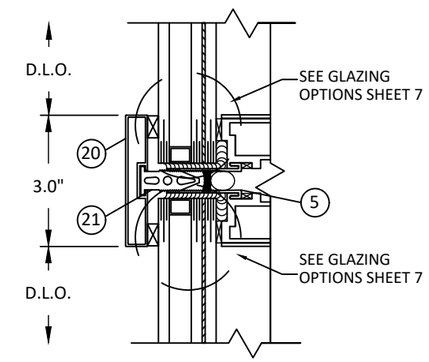

OPTIONAL APPLIED CAP

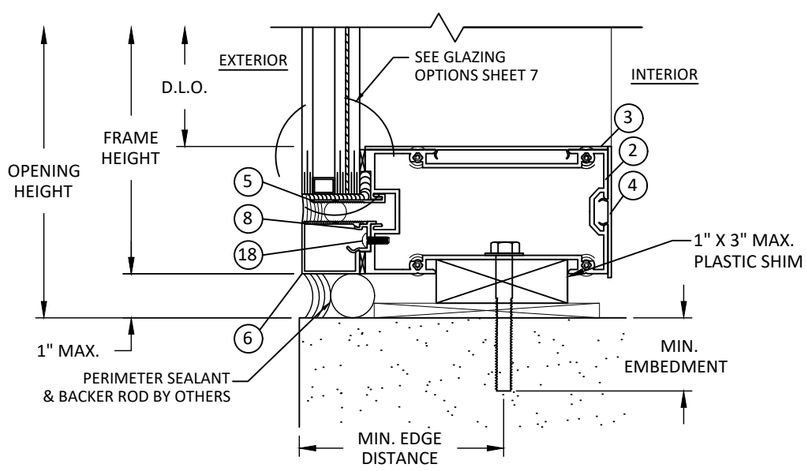

C/3 VERTICAL SECTION

SILL - INSULATED GLASS
ANCHORS THROUGH SILL

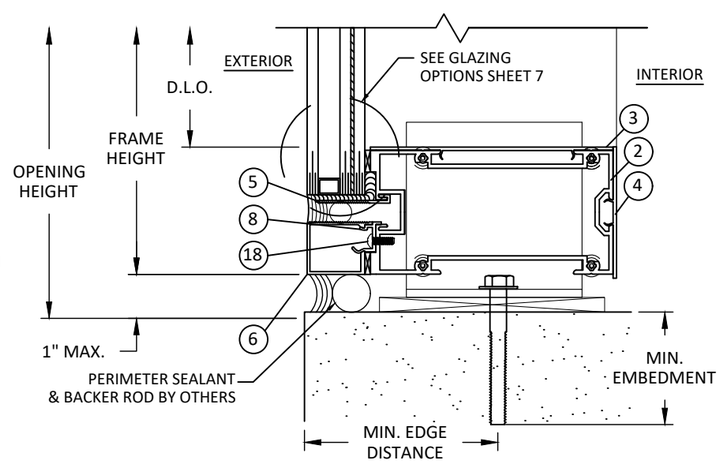

F/3 VERTICAL SECTION

SILL - INSULATED GLASS
ANCHOR CLIP

SEALANT NOTES:

1. JOINT AT HEAD, JAMB, AND SILL IS NON-STRUCTURAL AND SHALL BE SUFFICIENT TO ALLOW PROPER WEATHERPROOFING. LARGER GAP SPACE FOR SEALING JOINT MAY BE UTILIZED SUCH THAT EVIDENCE IS SUBMITTED IN ACCORDANCE WITH SEALANT PRODUCT MANUFACTURER'S GUIDELINES & RECOMMENDATION AND SHALL BE REVIEWED BY THE AUTHORITY HAVING JURISDICTION.

Countryside Glass & Mirror
COUNTRYSIDE GLASS
& MIRROR, INC.
2650 GANDY BLVD NORTH.
ST. PETERSBURG, FL 33702
PH: (727)738-6000 FAX: (727)738-6100

TITLE: *COUNTRYSIDE ARMOR WALL SINGLE SPAN SYSTEM CS3000 VERSION 23 (WZ3)(IMPACT)*
VERTICAL SECTIONS

PREPARED BY:
BUILDING DROPS, INC.
1900 NE MIAMI COURT, SUITE 2-15
MIAMI, FL 33132
PH: (954)399-8478
FAX: (954)744.4738
WEB: www.buildingdrops.com

REMARKS	BY	DATE

THE INSTALLATION DETAILS DESCRIBED HERE IN ARE GENERIC AND MAY NOT REFLECT ACTUAL CONDITIONS FOR A SPECIFIC SITE. IF SITE CONDITIONS CAUSE INSTALLATION TO DEVIATE FROM THE REQUIREMENTS DETAILED HEREIN, A LICENSED ENGINEER OR ARCHITECT SHALL PREPARE SITE SPECIFIC DOCUMENTS FOR USE WITH THIS DOCUMENT.

HERMES F. NORERO
LICENSE
No. 73778
STATE OF
FLORIDA
PROFESSIONAL ENGINEER

HERMES F. NORERO, P.E.
FLORIDA P.E. No. 73778
BUILDING DROPS, INC
1900 NE MIAMI COURT, SUITE 2-15
MIAMI, FL 33132
FBPE CERT. OF AUTHORIZATION No. 29578

FL #: FL31183

DATE: 08.19.24

DWG. BY: SH | CHK. BY: HFN

SCALE: NTS

DWG. #: CGM015

SHEET: 3

8/28/2024 4:44 PM
c:\users\sebastianherreros\building drops, inc\building drops landing - common\projects\countryside glass & mirror, inc\fbc-23-0564 - fl31183 revision - armorwall curtain wall\dwgs\final\cgm015.dwg

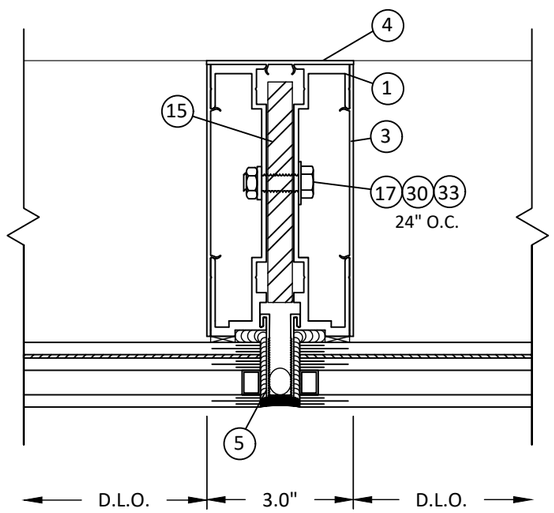

A/4 HORIZONTAL SECTION

INTEGRATED VERTICAL INTERMEDIATE - INSULATED GLASS

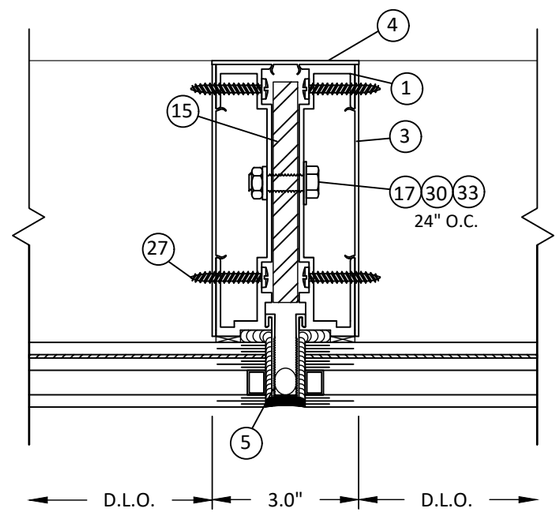

B/4 HORIZONTAL SECTION

INTEGRATED VERTICAL INTERMEDIATE - INSULATED GLASS

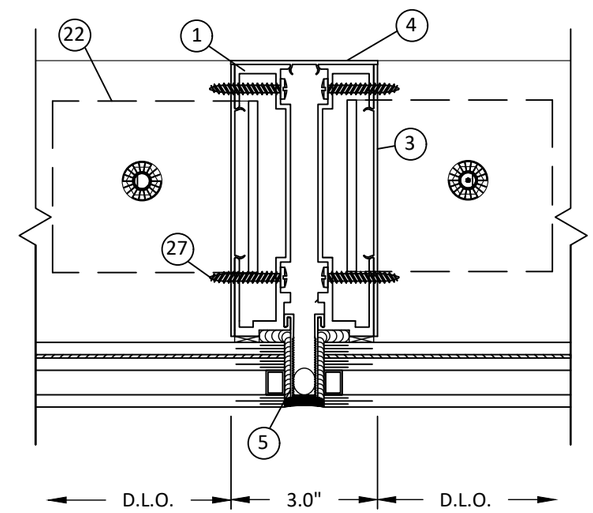

C/4 HORIZONTAL SECTION

INTEGRATED VERTICAL INTERMEDIATE - INSULATED GLASS
ANCHOR CLIPS

Countryside Glass & Mirror
COUNTRYSIDE GLASS & MIRROR, INC.
2650 GANDY BLVD NORTH.
ST. PETERSBURG, FL 33702
PH: (727)738-6000 FAX: (727)738-6100

TITLE: *COUNTRYSIDE ARMOR WALL SINGLE SPAN SYSTEM CS3000 VERSION 23 (WZ3)(IMPACT)*
HORIZONTAL SECTIONS

PREPARED BY:
BUILDING DROPS, INC.
1900 NE MIAMI COURT, SUITE 2-15
MIAMI, FL 33132
PH: (954)399-8478
FAX: (954)744.4738
WEB: www.buildingdrops.com

REMARKS	BY	DATE

THE INSTALLATION DETAILS DESCRIBED HERE IN ARE GENERIC AND MAY NOT REFLECT ACTUAL CONDITIONS FOR A SPECIFIC SITE. IF SITE CONDITIONS CAUSE INSTALLATION TO DEVIATE FROM THE REQUIREMENTS DETAILED HEREIN, A LICENSED ENGINEER OR ARCHITECT SHALL PREPARE SITE SPECIFIC DOCUMENTS FOR USE WITH THIS DOCUMENT.

HERMES F. NORERO LICENSE No. 73778 STATE OF FLORIDA PROFESSIONAL ENGINEER

HERMES F. NORERO, P.E.
FLORIDA P.E. No. 73778
BUILDING DROPS, INC
1900 NE MIAMI COURT, SUITE 2-15
MIAMI, FL 33132
FBPE CERT. OF AUTHORIZATION No. 29578

FL #: FL31183

DATE: 08.19.24

DWG. BY: SH | CHK. BY: HFN

SCALE: NTS

DWG. #: CGM015

SHEET: 4 OF 16

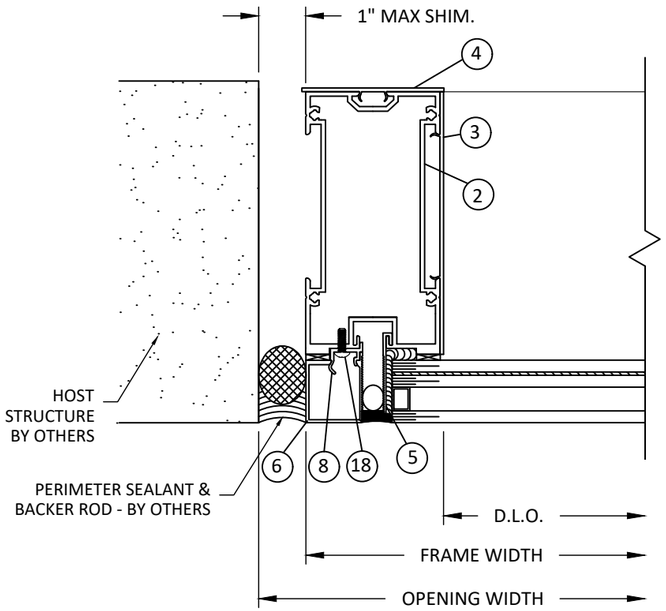

A/5 HORIZONTAL SECTION

JAMB - INSULATED GLASS

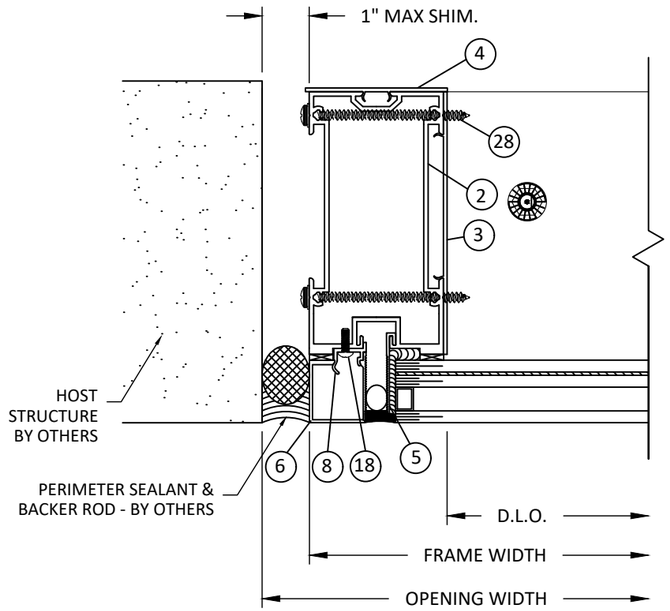

B/5 HORIZONTAL SECTION

JAMB - INSULATED GLASS
INTEGRATED HORIZONTAL CONNECTION

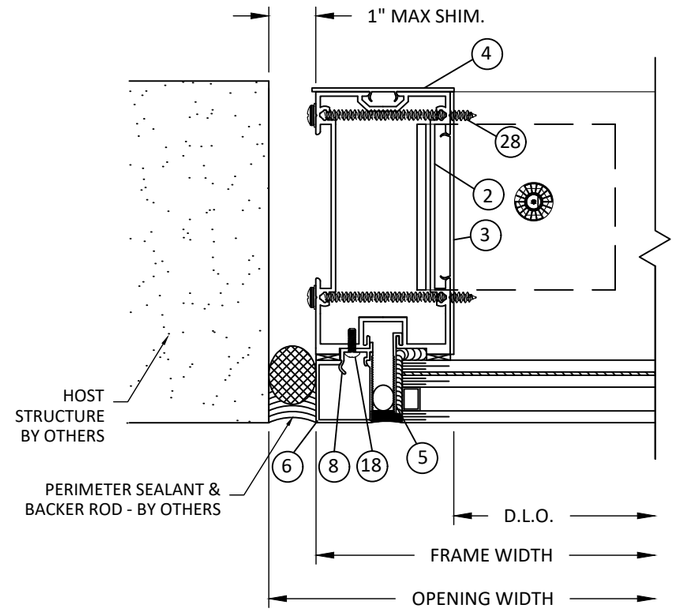

C/5 HORIZONTAL SECTION

JAMB - INSULATED GLASS
INTEGRATED HORIZONTAL CONNECTION

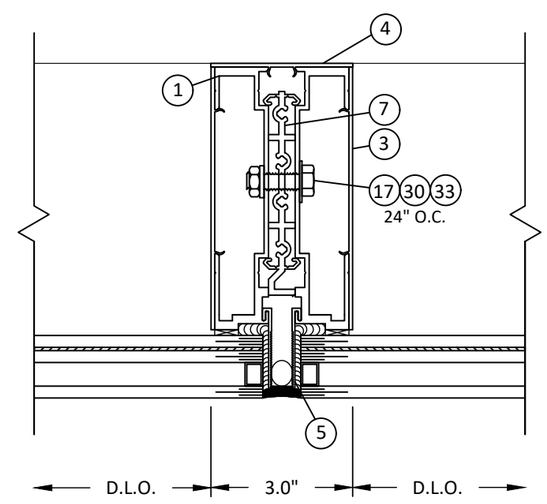

F/5 HORIZONTAL SECTION

INTEGRATED VERTICAL INTERMEDIATE - INSULATED GLASS

Countryside Glass & Mirror
COUNTRYSIDE GLASS & MIRROR, INC.
2650 GANDY BLVD NORTH.
ST. PETERSBURG, FL 33702
PH: (727)738-6000 FAX: (727)738-6100

TITLE: *COUNTRYSIDE ARMOR WALL SINGLE SPAN SYSTEM CS3000 VERSION 23 (WZ3)(IMPACT)*
HORIZONTAL SECTIONS

PREPARED BY:
BUILDING DROPS, INC.
1900 NE MIAMI COURT, SUITE 2-15
MIAMI, FL 33132
PH: (954)399-8478
FAX: (954)744.4738
WEB: www.buildingdrops.com

REMARKS	BY	DATE

THE INSTALLATION DETAILS DESCRIBED HERE IN ARE GENERIC AND MAY NOT REFLECT ACTUAL CONDITIONS FOR A SPECIFIC SITE. IF SITE CONDITIONS CAUSE INSTALLATION TO DEVIATE FROM THE REQUIREMENTS DETAILED HEREIN, A LICENSED ENGINEER OR ARCHITECT SHALL PREPARE SITE SPECIFIC DOCUMENTS FOR USE WITH THIS DOCUMENT.

HERMES F. NORERO LICENSE No. 73778 STATE OF FLORIDA PROFESSIONAL ENGINEER

HERMES F. NORERO, P.E.
FLORIDA P.E. No. 73778
BUILDING DROPS, INC
1900 NE MIAMI COURT, SUITE 2-15
MIAMI, FL 33132
FBPE CERT. OF AUTHORIZATION No. 29578

FL #: FL31183

DATE: 08.19.24

DWG. BY: SH | CHK. BY: HFN

SCALE: NTS

DWG. #: CGM015

SHEET: 5 OF 16

8/28/2024 4:44 PM
c:\users\sebastianherreros\building drops, inc\building drops landing - common\projects\countryside glass & mirror, inc\fbc-23-0564 - fl31183 revision - armorwall curtain wall\dwgs\final\cgm015.dwg

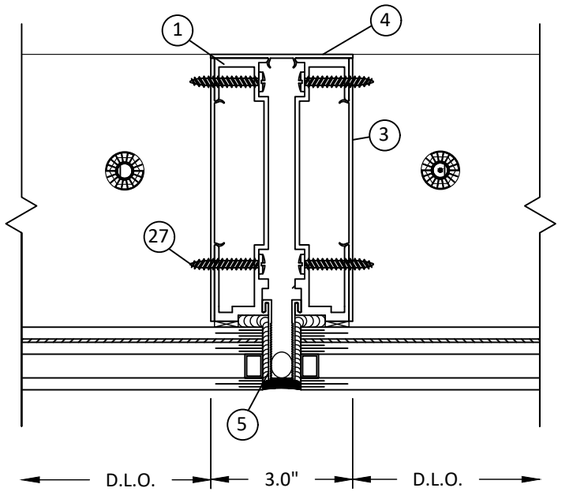

A 6 HORIZONTAL SECTION

INTEGRATED VERTICAL INTERMEDIATE - INSULATED GLASS ANCHORS THROUGH SILL

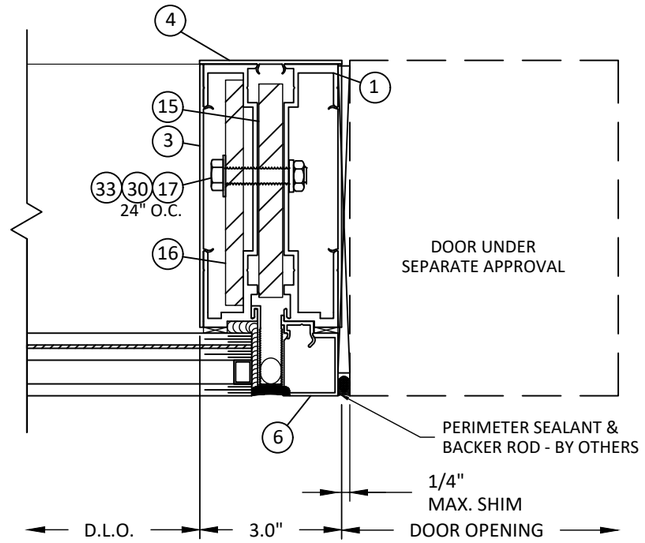

B 6 HORIZONTAL SECTION

VERTICAL INTERMEDIATE - DOOR CONNECTION

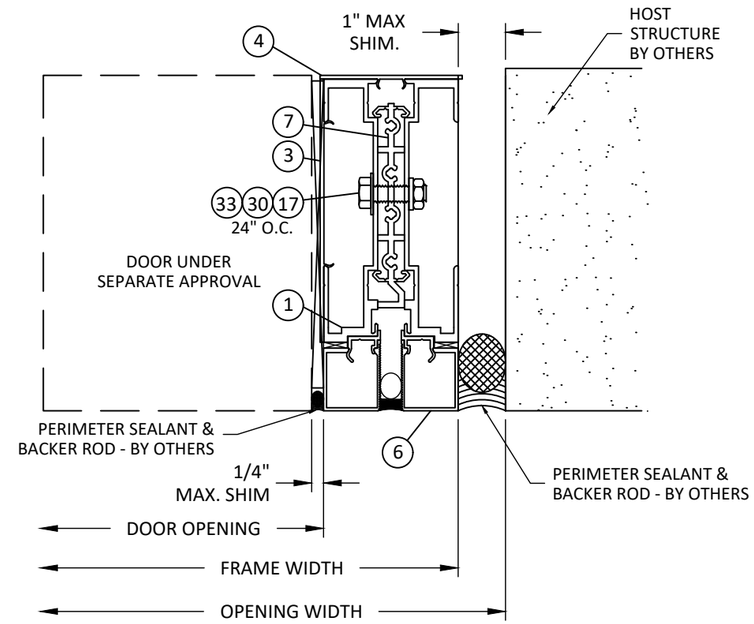

C 6 HORIZONTAL SECTION

JAMB - DOOR CONNECTION

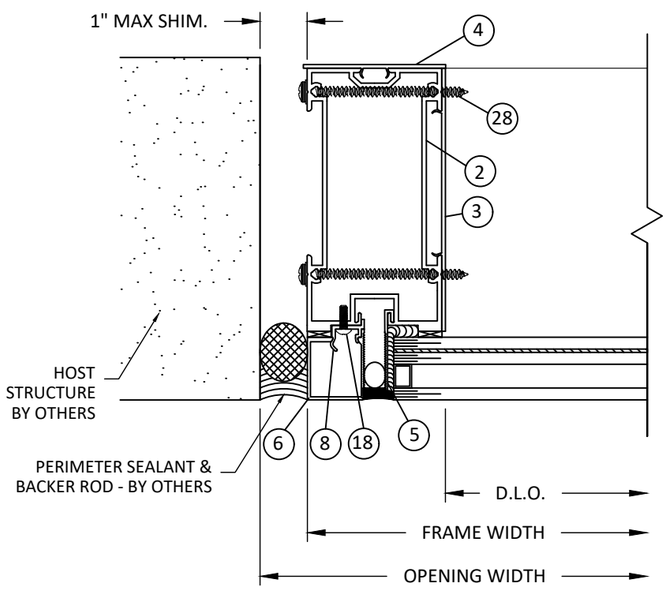

D 6 HORIZONTAL SECTION

JAMB - INSULATED GLASS
INTEGRATED HORIZONTAL CONNECTION

Countryside Glass & Mirror
COUNTRYSIDE GLASS & MIRROR, INC.
2650 GANDY BLVD NORTH.
ST. PETERSBURG, FL 33702
PH: (727)738-6000 FAX: (727)738-6100

TITLE: *COUNTRYSIDE ARMOR WALL SINGLE SPAN SYSTEM CS3000 VERSION 23 (WZ3)(IMPACT)*
HORIZONTAL SECTIONS

PREPARED BY:
BUILDING DROPS, INC.
1900 NE MIAMI COURT, SUITE 2-15
MIAMI, FL 33132
PH: (954)399-8478
FAX: (954)744.4738
WEB: www.buildingdrops.com

REMARKS	BY	DATE

THE INSTALLATION DETAILS DESCRIBED HERE IN ARE GENERIC AND MAY NOT REFLECT ACTUAL CONDITIONS FOR A SPECIFIC SITE. IF SITE CONDITIONS CAUSE INSTALLATION TO DEVIATE FROM THE REQUIREMENTS DETAILED HEREIN, A LICENSED ENGINEER OR ARCHITECT SHALL PREPARE SITE SPECIFIC DOCUMENTS FOR USE WITH THIS DOCUMENT.

HERMES F. NORERO LICENSE No. 73778 STATE OF FLORIDA PROFESSIONAL ENGINEER

HERMES F. NORERO, P.E.
FLORIDA P.E. No. 73778
BUILDING DROPS, INC
1900 NE MIAMI COURT, SUITE 2-15
MIAMI, FL 33132
FBPE CERT. OF AUTHORIZATION No. 29578

FL #: FL31183

DATE: 08.19.24

DWG. BY: SH | CHK. BY: HFN

SCALE: NTS

DWG. #: CGM015

SHEET: 6 OF 16

8/28/2024 4:44 PM
c:\users\sebastianherreros\building drops, inc\building drops landing - common\projects\countryside glass & mirror, inc\fbc-23-0564 - fl31183 revision - armorwall curtain wall\dwgs\final\cgm015.dwg

GLASS CAPACITY CHARTS

* NOTE:
1. GLASS CAPACITIES ON THIS SHEET ARE BASED ON ASTM E1300 (3 SEC. GUSTS) AND CHAPTER 17 OF THE CURRENT FBC FOR SIZES OTHER THAN TESTED.
2. D.L.O. MAY NOT EXCEED MAX DIMENSIONS IN GLASS CHARTS FOR GLASS TYPE.

LMI GLAZING OPTION

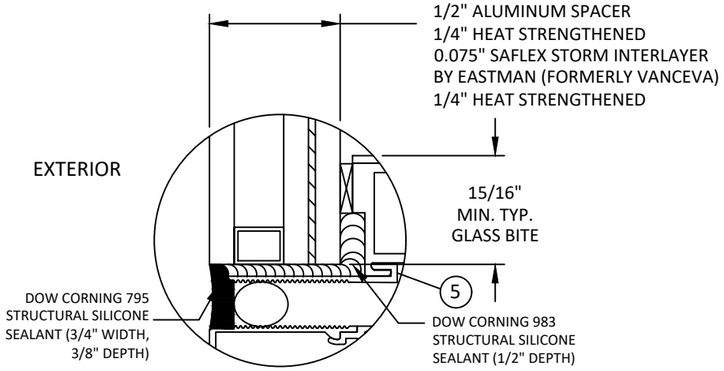

GLASS TYPE 'A'

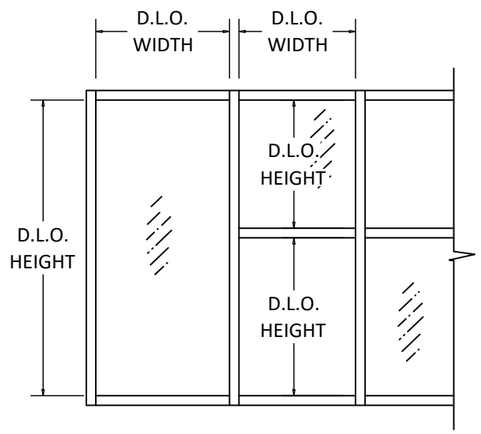

PANEL DIMENSIONS

('W' ≥ 'H')

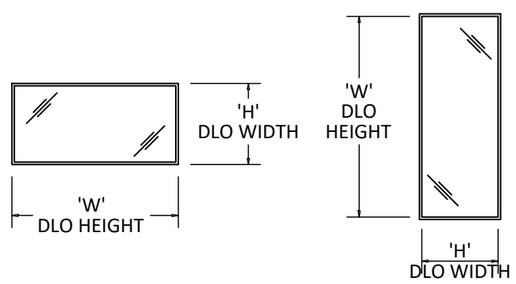

GLASS LOAD CAPACITY (PSF)		
DAYLIGHT OPENING DIMS. (in)		GLASS TYPE 'A'
DLO 'W'	DLO 'H'	EXT. (+) INT. (-)
33.0	78.0	70.0
39.0		70.0
45.0		70.0
51.0		70.0
57.0		70.0
63.0		63.3
69.0		57.8
75.0		53.2
81.0		51.2
33.0	84.0	70.0
39.0		70.0
45.0		70.0
51.0		70.0
57.0		70.0
63.0		63.3
69.0		57.8
75.0		53.2
33.0	90.0	70.0
39.0		70.0
45.0		70.0
51.0		70.0
57.0		70.0
63.0		63.3
69.0		57.8
33.0	96.0	70.0
39.0		70.0
45.0		70.0
51.0		70.0
57.0		70.0
63.0		63.3
69.0		57.8
33.0	102.0	70.0
39.0		70.0
45.0		70.0
51.0		70.0
57.0		70.0
63.0		63.3

GLASS LOAD CAPACITY (PSF)		
DAYLIGHT OPENING DIMS. (in)		GLASS TYPE 'A'
DLO 'W'	DLO 'H'	EXT. (+) INT. (-)
33.0	108.0	70.0
39.0		70.0
45.0		70.0
51.0		70.0
57.0		70.0
33.0	114.0	70.0
39.0		70.0
45.0		70.0
51.0		70.0
57.0		70.0
33.0	117.0	70.0
39.0		70.0
45.0		70.0
51.0		70.0
57.0		70.0
33.0	120.0	70.0
39.0		70.0
45.0		70.0
51.0		70.0
33.0	126.0	70.0
39.0		70.0
45.0		70.0
51.0		70.0
33.0	132.0	70.0
39.0		70.0
45.0		70.0
33.0	138.0	70.0
39.0		70.0
45.0		70.0

Countryside Glass & Mirror
COUNTRYSIDE GLASS & MIRROR, INC.
2650 GANDY BLVD NORTH.
ST. PETERSBURG, FL 33702
PH: (727)738-6000 FAX: (727)738-6100

TITLE: *COUNTRYSIDE ARMOR WALL SINGLE SPAN SYSTEM CS3000 VERSION 23 (WZ3)(IMPACT)*
GLAZING DETAILS & GLASS CAPACITY CHARTS

PREPARED BY:
BUILDING DROPS, INC.
1900 NE MIAMI COURT, SUITE 2-15
MIAMI, FL 33132
PH: (954)399-8478
FAX: (954)744.4738
WEB: www.buildingdrops.com

REMARKS	BY	DATE

THE INSTALLATION DETAILS DESCRIBED HERE IN ARE GENERIC AND MAY NOT REFLECT ACTUAL CONDITIONS FOR A SPECIFIC SITE. IF SITE CONDITIONS CAUSE INSTALLATION TO DEVIATE FROM THE REQUIREMENTS DETAILED HEREIN, A LICENSED ENGINEER OR ARCHITECT SHALL PREPARE SITE SPECIFIC DOCUMENTS FOR USE WITH THIS DOCUMENT.

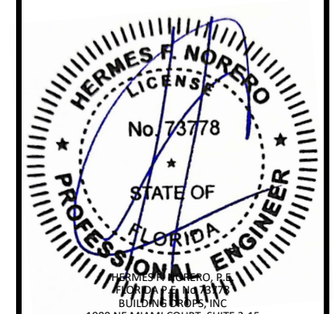

HERMES F. NORERO, P.E.
FLORIDA P.E. No. 73778
BUILDING DROPS, INC
1900 NE MIAMI COURT, SUITE 2-15
MIAMI, FL 33132
FBPE CERT. OF AUTHORIZATION No. 29578

FL #: FL31183

DATE: 08.19.24

DWG. BY: SH | CHK. BY: HFN

SCALE: NTS

DWG. #: CGM015

SHEET: 7 OF 16

8/28/2024 4:44 PM
c:\users\sebastianherreros\building drops, inc\building drops landing - common\projects\countryside glass & mirror, inc\fbc-23-0564 - fl31183 revision - armorwall curtain wall\dwgs\final\cgm015.dwg

SINGLE SPAN VERTICAL MULLION CAPACITIES

MAX. TRIB. WIDTH 'W' (IN.)	MAX. SPAN 'L' (IN.)	L1	L2
36	84	70.0	70.0
42		70.0	70.0
48		70.0	70.0
54		70.0	70.0
60		70.0	70.0
66		70.0	70.0
72		70.0	70.0
78		70.0	--
84		70.0	--
36	90	70.0	70.0
42		70.0	70.0
48		70.0	70.0
54		70.0	70.0
60		70.0	70.0
66		70.0	70.0
72		70.0	--
78		70.0	--
84		70.0	--
36	96	70.0	70.0
42		70.0	70.0
48		70.0	70.0
54		70.0	70.0
60		70.0	70.0
66		70.0	--
72		70.0	--
78		70.0	--
84		70.0	--
36	102	70.0	70.0
42		70.0	70.0
48		70.0	70.0
54		70.0	70.0
60		70.0	70.0
66		70.0	--
72		70.0	--
78		70.0	--
36	103.3	70.0	70.0
42		70.0	70.0
48		70.0	70.0
54		70.0	70.0
60		70.0	70.0
66		70.0	--
72		70.0	--
78		70.0	--
36	108	70.0	70.0
42		70.0	70.0
48		70.0	70.0
54		70.0	70.0
60		70.0	--
66		70.0	--
72		70.0	--
78		70.0	--

MAX. TRIB. WIDTH 'W' (IN.)	MAX. SPAN 'L' (IN.)	L1	L2
36	114	70.0	70.0
42		70.0	70.0
48		70.0	70.0
54		70.0	64.7
60		70.0	--
66		70.0	--
72		70.0	--
36	120	70.0	70.0
42		70.0	70.0
48		70.0	65.7
54		70.0	--
60		70.0	--
66		70.0	--
36	126	70.0	70.0
42		70.0	68.1
48		70.0	59.6
54		70.0	--
60		70.0	--
66		70.0	--
36	132	70.0	--
42		70.0	--
48		70.0	--
54		70.0	--
60		70.0	--
36	138	70.0	--
42		70.0	--
48		70.0	--
54		70.0	--
60		70.0	--
36	141.7	70.0	--
42		70.0	--
48		70.0	--
54		70.0	--
60		69.7	--
36	144	70.0	--
42		70.0	--
48		70.0	--
54		70.0	--
36	150	70.0	--
42		70.0	--
48		70.0	--
54		69.1	--
36	156	70.0	--
42		70.0	--
48		70.0	--
54		63.9	--
36	162	70.0	--
42		70.0	--
48		64.8	--

VERTICAL MEMBER SINGLE SPAN NOTES:

1. DETAILS AT RIGHT HAVE BEEN SHOWN FOR ILLUSTRATIVE PURPOSES. FOR DETAILS OF FULL ASSEMBLY PLEASE REFER TO APPLICABLE DETAILS ON SHEETS 4-6.
2. TABULATED DESIGN PRESSURE VALUES ARE BASED ON LIMITATIONS OF DEFLECTION, FIBERSTRESS, & END REACTION PER MULLION SPAN ('L') AND MULLION SPACING ('W').
3. FOR SITE CONDITIONS WHICH EXCEED LIMITATIONS SHOWN, FURTHER ENGINEERING MAY BE REQUIRED ON A CASE BY CASE BASIS.

NOTE: REINFORCING BEGINS AND ENDS AT THE LOWER AND UPPER DLO.

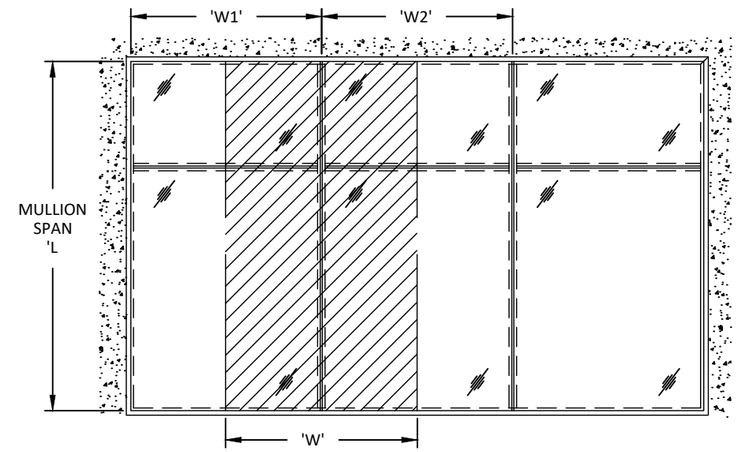

MULLION SPACING OR BAY WIDTH, 'W'	$W = \frac{W1 + W2}{2}$

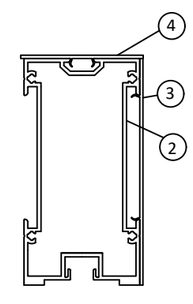

L1 & L2
JAMB

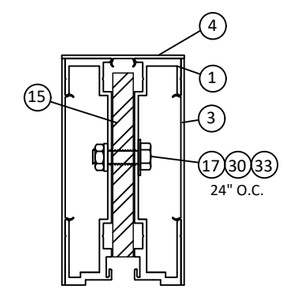

L1
INTERMEDIATE
NOTE: DOOR JAMB DETAIL B/6 SHALL USE L1 VALUES

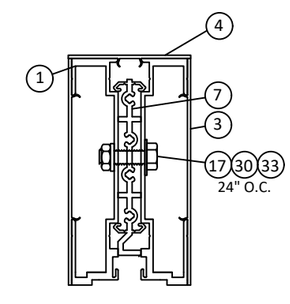

L2
INTERMEDIATE
NOTE: DOOR JAMB DETAIL C/6 SHALL USE L2 VALUES

VERTICAL MULLIONS

Countryside Glass & Mirror
COUNTRYSIDE GLASS & MIRROR, INC.
2650 GANDY BLVD NORTH.
ST. PETERSBURG, FL 33702
PH: (727)738-6000 FAX: (727)738-6100

TITLE: *COUNTRYSIDE ARMOR WALL SINGLE SPAN SYSTEM CS3000 VERSION 23 (WZ3)(IMPACT)*
VERTICAL MULLION CAPACITIES

PREPARED BY:
BUILDING DROPS, INC.
1900 NE MIAMI COURT, SUITE 2-15
MIAMI, FL 33132
PH: (954)399-8478
FAX: (954)744.4738
WEB: www.buildingdrops.com

REMARKS	BY	DATE

THE INSTALLATION DETAILS DESCRIBED HERE IN ARE GENERIC AND MAY NOT REFLECT ACTUAL CONDITIONS FOR A SPECIFIC SITE. IF SITE CONDITIONS CAUSE INSTALLATION TO DEVIATE FROM THE REQUIREMENTS DETAILED HEREIN, A LICENSED ENGINEER OR ARCHITECT SHALL PREPARE SITE SPECIFIC DOCUMENTS FOR USE WITH THIS DOCUMENT.

HERMES F. NORERO LICENSE No. 73778 STATE OF FLORIDA PROFESSIONAL ENGINEER

HERMES F. NORERO, P.E.
FLORIDA P.E. No. 73778
BUILDING DROPS, INC
1900 NE MIAMI COURT, SUITE 2-15
MIAMI, FL 33132
FBPE CERT. OF AUTHORIZATION No. 29578

FL #: FL31183
DATE: 08.19.24
DWG. BY: SH
CHK. BY: HFN
SCALE: NTS
DWG. #: CGM015
SHEET: 8
OF 16

8/28/2024 4:44 PM
c:\users\sebastianherreros\building drops, inc\building drops landing - common\projects\countryside glass & mirror, inc\fbc-23-0564 - fl31183 revision - armorwall curtain wall\dwgs\final\cgm015.dwg

HORIZONTAL MULLION CAPACITIES		
MAX. D.L.O. WIDTH (IN.)	MAX. D.L.O. HEIGHT ABOVE HORIZONTAL (IN.)	H1 / H3 DESIGN PRESSURE (+/- PSF)
81	78	51.2
75	84	53.2
69	96	57.8
63	102	63.3
57	117	70
51	126	70
45	138	70

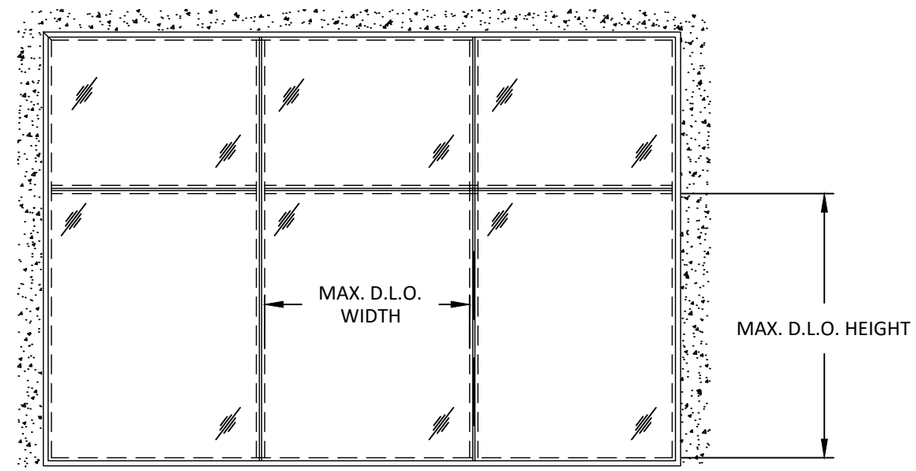

ELEVATION

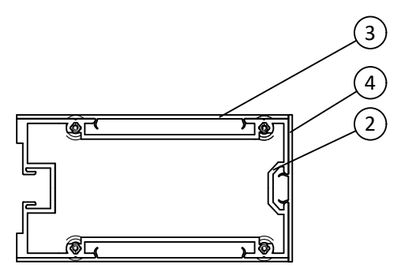

H1

INTEGRATED HORIZONTAL MULLION

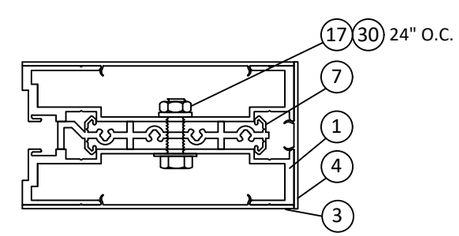

H3

DOOR TRANSOM HORIZONTAL MULLION

HORIZONTAL MULLIONS

Countryside Glass & Mirror

COUNTRYSIDE GLASS & MIRROR, INC.
2650 GANDY BLVD NORTH.
ST. PETERSBURG, FL 33702
PH: (727)738-6000 FAX: (727)738-6100

TITLE: *COUNTRYSIDE ARMOR WALL SINGLE SPAN SYSTEM CS3000 VERSION 23 (WZ3)(IMPACT)*
HORIZONTAL MULLION CAPACITIES

PREPARED BY:
BUILDING DROPS, INC.
1900 NE MIAMI COURT, SUITE 2-15
MIAMI, FL 33132
PH: (954)399-8478
FAX: (954)744.4738
WEB: www.buildingdrops.com

REMARKS	BY	DATE

THE INSTALLATION DETAILS DESCRIBED HERE IN ARE GENERIC AND MAY NOT REFLECT ACTUAL CONDITIONS FOR A SPECIFIC SITE. IF SITE CONDITIONS CAUSE INSTALLATION TO DEVIATE FROM THE REQUIREMENTS DETAILED HEREIN, A LICENSED ENGINEER OR ARCHITECT SHALL PREPARE SITE SPECIFIC DOCUMENTS FOR USE WITH THIS DOCUMENT.

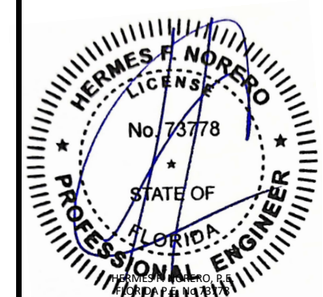

HERMES F. NORERO, P.E.
LICENSE No. 73778
BUILDING DROPS, INC
1900 NE MIAMI COURT, SUITE 2-15
MIAMI, FL 33132
FBPE CERT. OF AUTHORIZATION No. 29578

FL #: FL31183

DATE: 08.19.24

DWG. BY: SH | CHK. BY: HFN

SCALE: NTS

DWG. #: CGM015

SHEET: 9 OF 16

8/28/2024 4:44 PM
c:\users\sebastianherreros\building drops, inc\building drops landing - common\projects\countryside glass & mirror, inc\fbc-23-0564 - fl31183 revision - armorwall curtain wall\dwgs\final\cgm015.dwg

HEAD & SILL - ANCHOR TABLE

TYPE	DIAMETER	ANCHOR TYPE	SUBSTRATE	MIN. EDGE DISTANCE	MIN. EMBEDMENT
A	1/2"	DEWALT SCREW-BOLT+	MIN. 4000 PSI CONCRETE	4-1/2"	2"
B	1/2"	SELF-TAPPING OR THREADED BOLT, MIN. SAE GR.5 OR ASTM A325	MIN. 3/16" THICK A36 STEEL	1-1/4"	FOR SELF-TAPPING OR DRILL & TAPED HOLES, MIN. 3 THREADS PENETRATION BEYOND STEEL STRUCTURE
C	5/16"	DEWALT DRILL-FLEX OR HILTI KWIK-FLEX SELF-DRILLING	MIN. 12 GAUGE STEEL, MIN. Fy = 33 KSI	3/4"	MIN. 3 THREADS PENETRATION BEYOND STEEL STRUCTURE
D	1/2"	LAG SCREW	WOOD (MIN. SG = 0.55)	2"	2"
E	3/8"	DEWALT SCREW-BOLT+	MIN. 4000 PSI CONCRETE	THROUGH FRAME - 3" CLIP - 4-1/2"	2"
F	3/8"	SELF-TAPPING OR THREADED BOLT, MIN. SAE GR.5 OR ASTM A325	MIN. 3/16" THICK A36 STEEL	1"	FOR SELF-TAPPING OR DRILL & TAPED HOLES, MIN. 3 THREADS PENETRATION BEYOND STEEL STRUCTURE
G	3/8"	LAG SCREW	WOOD (MIN. SG = 0.55)	1-1/2"	2"

INSTALLATION NOTES:

1. SEE SHEETS 11 - 14 FOR ANCHOR QUANTITY REQUIREMENTS AND CAPACITIES.
2. THE NUMBER OF INSTALLATION ANCHORS DEPICTED IS THE MINIMUM NUMBER OF ANCHORS TO BE USED FOR PRODUCT INSTALLATION OF THE MAXIMUM SIZE LISTED.
3. INSTALL INDIVIDUAL INSTALLATION ANCHORS WITHIN A TOLERANCE OF ±1/2 INCH THE DEPICTED LOCATION & SPACING IN THE ANCHOR LAYOUT DETAILS (I.E., WITHOUT CONSIDERATION OF TOLERANCES). TOLERANCES ARE NOT CUMULATIVE FROM ONE INSTALLATION ANCHOR TO THE NEXT.
4. SHIM AS REQUIRED AT EACH INSTALLATION ANCHOR WITH LOAD BEARING SHIM(S). MAXIMUM ALLOWABLE SHIM STACK TO BE 1 INCH FOR THROUGH FRAME INSTALLATION AND 1/4" FOR ANCHOR CLIP INSTALLATION. SHIM WHERE SPACE OF 1/16 INCH OR GREATER OCCURS. SHIM(S) SHALL BE CONSTRUCTED OF HIGH DENSITY PLASTIC OR BETTER.
5. FOR MASONRY OR CONCRETE OPENINGS, 1X WOOD BUCK MAY BE USED (OPTIONAL) AS LONG AS THE MINIMUM EMBEDMENT AND EDGE DISTANCE REQUIREMENTS ARE STILL MET WITHIN THE CORRESPONDING HOST SUBSTRATE. SEE GENERAL NOTE #3 ON SHEET 1 FOR MORE INFORMATION.
6. MINIMUM EMBEDMENT AND EDGE DISTANCE EXCLUDE WALL FINISHES, INCLUDING BUT NOT LIMITED TO STUCCO, FOAM, BRICK VENEER, AND SIDING.
7. INSTALLATION ANCHORS AND ASSOCIATED HARDWARE MUST BE MADE OF CORROSION RESISTANT MATERIAL OR HAVE A CORROSION RESISTANT COATING.
8. FOR HOLLOW BLOCK AND GROUT FILLED BLOCK, DO NOT INSTALL INSTALLATION ANCHORS INTO MORTAR JOINTS. EDGE DISTANCE IS MEASURED FROM FREE EDGE OF BLOCK OR EDGE OF MORTAR JOINT INTO FACE SHELL OF BLOCK.
9. INSTALLATION ANCHORS SHALL BE INSTALLED IN ACCORDANCE WITH ANCHOR MANUFACTURER'S INSTALLATION INSTRUCTIONS, AND ANCHORS SHALL NOT BE USED IN SUBSTRATES WITH STRENGTHS LESS THAN THE MINIMUM STRENGTH SPECIFIED BY THE ANCHOR MANUFACTURER.

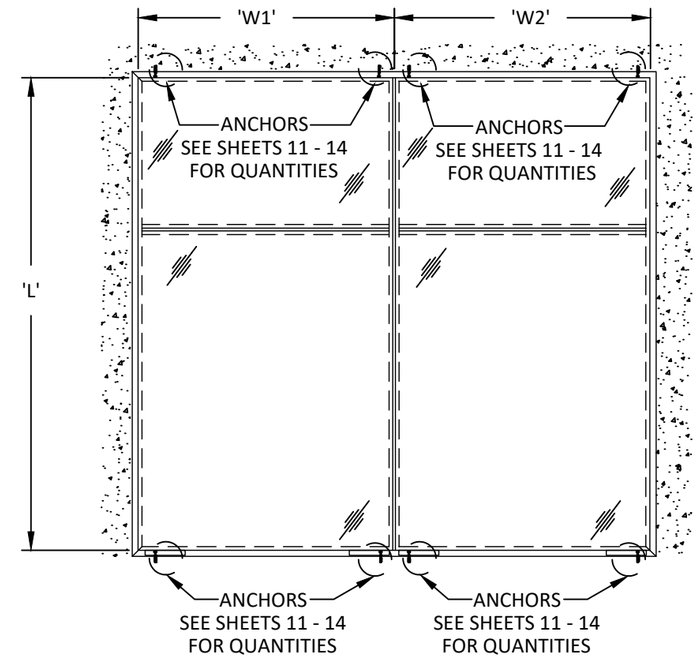

SINGLE SPAN ANCHOR LAYOUT

NOTE:
1. REFER TO ANCHOR LAYOUTS ABOVE FOR LOCATIONS AND DETERMINING MAX. LENGTHS (L) AND TRIBUTARY WIDTHS (W).
2. FOR SITE CONDITIONS NOT SHOWN IN THE DETAILS HEREIN OR EDGE DISTANCE REQUIREMENTS TO BE MODIFIED, ANCHORS MAY BE ENGINEERED ON A SITE SPECIFIC BASIS.

Countryside Glass & Mirror
COUNTRYSIDE GLASS & MIRROR, INC.
2650 GANDY BLVD NORTH.
ST. PETERSBURG, FL 33702
PH: (727)738-6000 FAX: (727)738-6100

TITLE: *COUNTRYSIDE ARMOR WALL SINGLE SPAN SYSTEM CS3000 VERSION 23 (WZ3)(IMPACT)*
ANCHOR SCHEDULE

PREPARED BY:
BUILDING DROPS, INC.
1900 NE MIAMI COURT, SUITE 2-15
MIAMI, FL 33132
PH: (954)399-8478
FAX: (954)744.4738
WEB: www.buildingdrops.com

REMARKS	BY	DATE

THE INSTALLATION DETAILS DESCRIBED HERE IN ARE GENERIC AND MAY NOT REFLECT ACTUAL CONDITIONS FOR A SPECIFIC SITE. IF SITE CONDITIONS CAUSE INSTALLATION TO DEVIATE FROM THE REQUIREMENTS DETAILED HEREIN, A LICENSED ENGINEER OR ARCHITECT SHALL PREPARE SITE SPECIFIC DOCUMENTS FOR USE WITH THIS DOCUMENT.

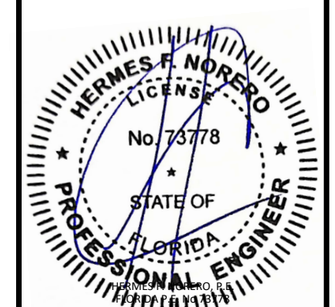

HERMES F. NORERO, P.E.
FLORIDA P.E. No. 73778
BUILDING DROPS, INC
1900 NE MIAMI COURT, SUITE 2-15
MIAMI, FL 33132
FBPE CERT. OF AUTHORIZATION No. 29578

FL #: FL31183
DATE: 08.19.24
DWG. BY: SH
CHK. BY: HFN
SCALE: NTS
DWG. #: CGM015
SHEET: 10
OF 16

8/28/2024 4:44 PM
c:\users\sebastianherreros\building drops, inc\building drops landing - common\projects\countryside glass & mirror, inc\fbc-23-0564 - fl31183 revision - armorwall curtain wall\dwgs\final\cgm015.dwg

SINGLE SPAN
SILL - THROUGH FRAME ANCHOR CAPACITY CHARTS
ANCHOR TYPES A - D

TRIBUTARY SIZE		MAX. ANCHOR CAPACITY - DESIGN PRESSURES (+/- PSF)													
MAX. WIDTH 'W'	MAX. SPAN 'L'	ANCHOR TYPE A1	ANCHOR TYPE A2	ANCHOR TYPE B1	ANCHOR TYPE B2	ANCHOR TYPE C1	ANCHOR TYPE C2	ANCHOR TYPE C3	ANCHOR TYPE C4	ANCHOR TYPE C5	ANCHOR TYPE D1	ANCHOR TYPE D2	ANCHOR TYPE D3	ANCHOR TYPE D4	ANCHOR TYPE D5
36	84	70	70	70	70	45	70	70	70	70	27	54	70	70	70
42		70	70	70	70	39	70	70	70	70	23	46	69	70	70
48		70	70	70	70	34	68	70	70	70	20	40	60	70	70
54		70	70	70	70	30	60	70	70	70	18	36	54	70	70
60		64	70	70	70	27	54	70	70	70	16	32	48	64	70
66		58	70	70	70	25	49	70	70	70	15	29	44	59	70
72		53	70	70	70	23	45	68	70	70	13	27	40	54	67
78		49	70	70	70	21	42	63	70	70	12	25	37	50	62
84		45	70	70	70	19	39	58	70	70	12	23	35	46	58
36	90	70	70	70	70	42	70	70	70	70	25	50	70	70	70
42		70	70	70	70	36	70	70	70	70	21	43	64	70	70
48		70	70	70	70	32	64	70	70	70	19	38	56	70	70
54		66	70	70	70	28	56	70	70	70	17	33	50	67	70
60		59	70	70	70	25	51	70	70	70	15	30	45	60	70
66		54	70	70	70	23	46	69	70	70	14	27	41	55	68
72		49	70	70	70	21	42	64	70	70	13	25	38	50	63
78		46	70	70	70	20	39	59	70	70	12	23	35	46	58
84		42	70	70	70	18	36	54	70	70	11	21	32	43	54
36	96	70	70	70	70	40	70	70	70	70	24	47	70	70	70
42		70	70	70	70	34	68	70	70	70	20	40	60	70	70
48		69	70	70	70	30	60	70	70	70	18	35	53	70	70
54		62	70	70	70	26	53	70	70	70	16	31	47	63	70
60		56	70	70	70	24	48	70	70	70	14	28	42	56	70
66		51	70	70	70	22	43	65	70	70	13	26	38	51	64
72		46	70	70	70	20	40	60	70	70	12	24	35	47	59
78		43	70	70	70	18	37	55	70	70	11	22	33	43	54
84		40	70	65	70	17	34	51	68	70	10	20	30	40	50
36	102	70	70	70	70	37	70	70	70	70	22	44	66	70	70
42		70	70	70	70	32	64	70	70	70	19	38	57	70	70
48		65	70	70	70	28	56	70	70	70	17	33	50	66	70
54		58	70	70	70	25	50	70	70	70	15	30	44	59	70
60		52	70	70	70	22	45	67	70	70	13	27	40	53	66
66		48	70	70	70	20	41	61	70	70	12	24	36	48	60
72		44	70	70	70	19	37	56	70	70	11	22	33	44	55
78		40	70	66	70	17	34	52	69	70	10	20	31	41	51
36	103.3	70	70	70	70	37	70	70	70	70	22	44	66	70	70
42		70	70	70	70	32	63	70	70	70	19	37	56	70	70
48		65	70	70	70	28	55	70	70	70	16	33	49	66	70
54		57	70	70	70	25	49	70	70	70	15	29	44	58	70
60		52	70	70	70	22	44	66	70	70	13	26	39	52	66
66		47	70	70	70	20	40	60	70	70	12	24	36	48	60
72		43	70	70	70	18	37	55	70	70	11	22	33	44	55
78		40	70	65	70	17	34	51	68	70	10	20	30	40	50
36	108	70	70	70	70	35	70	70	70	70	21	42	63	70	70
42		70	70	70	70	30	60	70	70	70	18	36	54	70	70
48		62	70	70	70	26	53	70	70	70	16	31	47	63	70
54		55	70	70	70	24	47	70	70	70	14	28	42	56	70
60		49	70	70	70	21	42	64	70	70	13	25	38	50	63
66		45	70	70	70	19	38	58	70	70	11	23	34	46	57
72		41	70	68	70	18	35	53	70	70	10	21	31	42	52
78		38	70	62	70	16	33	49	65	70	10	19	29	39	48

TRIBUTARY SIZE		MAX. ANCHOR CAPACITY - DESIGN PRESSURES (+/- PSF)													
MAX. WIDTH 'W'	MAX. SPAN 'L'	ANCHOR TYPE A1	ANCHOR TYPE A2	ANCHOR TYPE B1	ANCHOR TYPE B2	ANCHOR TYPE C1	ANCHOR TYPE C2	ANCHOR TYPE C3	ANCHOR TYPE C4	ANCHOR TYPE C5	ANCHOR TYPE D1	ANCHOR TYPE D2	ANCHOR TYPE D3	ANCHOR TYPE D4	ANCHOR TYPE D5
36	114	70	70	70	70	33	67	70	70	70	20	40	59	70	70
42		67	70	70	70	29	57	70	70	70	17	34	51	68	70
48		58	70	70	70	25	50	70	70	70	15	30	45	59	70
54		52	70	70	70	22	45	67	70	70	13	26	40	53	66
60		47	70	70	70	20	40	60	70	70	12	24	36	48	59
66		43	70	70	70	18	36	55	70	70	11	22	32	43	54
72		39	70	64	70	17	33	50	67	70	10	20	30	40	49
36	120	70	70	70	70	32	64	70	70	70	19	38	56	70	70
42		64	70	70	70	27	54	70	70	70	16	32	48	64	70
48		56	70	70	70	24	48	70	70	70	14	28	42	56	70
54		49	70	70	70	21	42	64	70	70	13	25	38	50	63
60		44	70	70	70	19	38	57	70	70	11	23	34	45	56
66		40	70	66	70	17	35	52	69	70	10	21	31	41	51
36	126	70	70	70	70	30	60	70	70	70	18	36	54	70	70
42		60	70	70	70	26	52	70	70	70	15	31	46	61	70
48		53	70	70	70	23	45	68	70	70	13	27	40	54	67
54		47	70	70	70	20	40	60	70	70	12	24	36	48	60
60		42	70	70	70	18	36	54	70	70	11	21	32	43	54
66		38	70	63	70	16	33	49	66	70	10	20	29	39	49
36	132	67	70	70	70	29	58	70	70	70	17	34	51	68	70
42		58	70	70	70	25	49	70	70	70	15	29	44	59	70
48		51	70	70	70	22	43	65	70	70	13	26	38	51	64
54		45	70	70	70	19	38	58	70	70	11	23	34	46	57
60		40	70	66	70	17	35	52	69	70	10	21	31	41	51
36	138	64	70	70	70	28	55	70	70	70	16	33	49	65	70
42		55	70	70	70	24	47	70	70	70	14	28	42	56	70
48		48	70	70	70	21	41	62	70	70	12	25	37	49	61
54		43	70	70	70	18	37	55	70	70	11	22	33	44	55
60		39	70	63	70	17	33	50	66	70	10	20	29	39	49
36	141.7	63	70	70	70	27	54	70	70	70	16	32	48	64	70
42		54	70	70	70	23	46	69	70	70	14	27	41	55	68
48		47	70	70	70	20	40	61	70	70	12	24	36	48	60
54		42	70	69	70	18	36	54	70	70	11	21	32	42	53
60		38	70	62	70	16	32	48	65	70	10	19	29	38	48
36	144	62	70	70	70	26	53	70	70	70	16	31	47	63	70
42		53	70	70	70	23	45	68	70	70	13	27	40	54	67
48		46	70	70	70	20	40	60	70	70	12	24	35	47	59
54		41	70	68	70	18	35	53	70	70	10	21	31	42	52
36	150	59	70	70	70	25	51	70	70	70	15	30	45	60	70
42		51	70	70	70	22	44	65	70	70	13	26	39	52	64
48		44	70	70	70	19	38	57	70	70	11	23	34	45	56
54		40	70	65	70	17	34	51	68	70	10	20	30	40	50
36	156	57	70	70	70	24	49	70	70	70	14	29	43	58	70
42		49	70	70	70	21	42	63	70	70	12	25	37	50	62
48		43	70	70	70	18	37	55	70	70	11	22	33	43	54
54		38	70	62	70	16	33	49	65	70	10	19	29	39	48
36	162	55	70	70	70	24	47	70	70	70	14	28	42	56	70
42		47	70	70	70	20	40	60	70	70	12	24	36	48	60
48		41	70	68	70	18	35	53	70	70	10	21	31	42	52

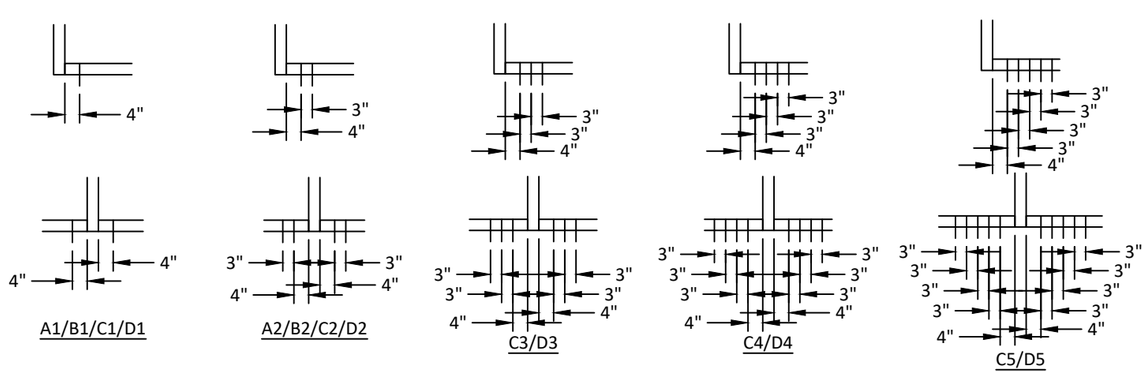

ANCHOR TYPES: SEE SHEET 10 FOR DESCRIPTION
A1/B1/C1/D1: (1) ANCHOR AT JAMB OR EACH SIDE OF MULLION
A2/B2/C2/D2: (2) ANCHORS AT JAMB OR EACH SIDE OF MULLION
A3/B3/C3/D3: (3) ANCHORS AT JAMB OR EACH SIDE OF MULLION
C4/D4: (4) ANCHORS AT JAMB OR EACH SIDE OF MULLION
C5/D5: (5) ANCHORS AT JAMB OR EACH SIDE OF MULLION

Countryside Glass & Mirror
COUNTRYSIDE GLASS & MIRROR, INC.
2650 GANDY BLVD NORTH.
ST. PETERSBURG, FL 33702
PH: (727)738-6000 FAX: (727)738-6100

TITLE: *COUNTRYSIDE ARMOR WALL SINGLE SPAN SYSTEM CS3000 VERSION 23 (WZ3)(IMPACT)*
ANCHOR LAYOUTS & CONSTRUCTION DETAILS

PREPARED BY:
BUILDING DROPS, INC.
1900 NE MIAMI COURT, SUITE 2-15
MIAMI, FL 33132
PH: (954)399-8478
FAX: (954)744.4738
WEB: www.buildingdrops.com

REMARKS	BY	DATE

THE INSTALLATION DETAILS DESCRIBED HERE IN ARE GENERIC AND MAY NOT REFLECT ACTUAL CONDITIONS FOR A SPECIFIC SITE. IF SITE CONDITIONS CAUSE INSTALLATION TO DEVIATE FROM THE REQUIREMENTS DETAILED HEREIN, A LICENSED ENGINEER OR ARCHITECT SHALL PREPARE SITE SPECIFIC DOCUMENTS FOR USE WITH THIS DOCUMENT.

HERMES F. NORERO LICENSE No. 73778 STATE OF FLORIDA PROFESSIONAL ENGINEER

HERMES F. NORERO, P.E.
FLORIDA LICENSE NO. 73778
BUILDING DROPS, INC
1900 NE MIAMI COURT, SUITE 2-15
MIAMI, FL 33132
FBPE CERT. OF AUTHORIZATION No. 29578

FL #: FL31183
DATE: 08.19.24
DWG. BY: SH
CHK. BY: HFN
SCALE: NTS
DWG. #: CGM015
SHEET: 11 OF 16

8/28/2024 4:44 PM
c:\users\sebastianherreros\building drops, inc\building drops landing - common\projects\countryside glass & mirror, inc\fbc-23-0564 - fl31183 revision - armorwall curtain wall\dwgs\final\cgm015.dwg

SINGLE SPAN
SILL - THROUGH FRAME ANCHOR CAPACITY CHARTS
ANCHOR TYPES E - G

TRIBUTARY SIZE		MAX. ANCHOR CAPACITY - DESIGN PRESSURES (+/- PSF)										
MAX. WIDTH 'W'	MAX. SPAN 'L'	ANCHOR TYPE E1	ANCHOR TYPE E2	ANCHOR TYPE E3	ANCHOR TYPE F1	ANCHOR TYPE F2	ANCHOR TYPE F3	ANCHOR TYPE G1	ANCHOR TYPE G2	ANCHOR TYPE G3	ANCHOR TYPE G4	ANCHOR TYPE G5
36	84	67	70	70	70	70	70	11	22	33	44	55
42		57	70	70	66	70	70	9	19	28	37	47
48		50	70	70	57	70	70	8	16	25	33	41
54		45	70	70	51	70	70	7	15	22	29	36
60		40	70	70	46	70	70	7	13	20	26	33
66		37	70	70	42	70	70	6	12	18	24	30
72		34	67	70	38	70	70	5	11	16	22	27
78		31	62	70	35	70	70	5	10	15	20	25
84		29	57	70	33	66	70	5	9	14	19	23
36	90	63	70	70	70	70	70	10	20	31	41	51
42		54	70	70	61	70	70	9	17	26	35	44
48		47	70	70	54	70	70	8	15	23	31	38
54		42	70	70	48	70	70	7	14	20	27	34
60		38	70	70	43	70	70	6	12	18	24	31
66		34	68	70	39	70	70	6	11	17	22	28
72		31	63	70	36	70	70	5	10	15	20	26
78		29	58	70	33	66	70	5	9	14	19	24
84		27	54	70	31	61	70	4	9	13	17	22
36	96	59	70	70	67	70	70	10	19	29	38	48
42		50	70	70	57	70	70	8	16	25	33	41
48		44	70	70	50	70	70	7	14	22	29	36
54		39	70	70	45	70	70	6	13	19	26	32
60		35	70	70	40	70	70	6	11	17	23	29
66		32	64	70	37	70	70	5	10	16	21	26
72		29	59	70	34	67	70	5	10	14	19	24
78		27	54	70	31	62	70	4	9	13	18	22
84		25	50	70	29	57	70	4	8	12	16	21
36	102	55	70	70	63	70	70	9	18	27	36	45
42		47	70	70	54	70	70	8	15	23	31	39
48		41	70	70	47	70	70	7	14	20	27	34
54		37	70	70	42	70	70	6	12	18	24	30
60		33	66	70	38	70	70	5	11	16	22	27
66		30	60	70	34	69	70	5	10	15	20	25
72		28	55	70	32	63	70	5	9	14	18	23
78		25	51	70	29	58	70	4	8	12	17	21
36	103.3	55	70	70	62	70	70	9	18	27	36	44
42		47	70	70	53	70	70	8	15	23	30	38
48		41	70	70	47	70	70	7	13	20	27	33
54		36	70	70	42	70	70	6	12	18	24	30
60		33	65	70	37	70	70	5	11	16	21	27
66		30	59	70	34	68	70	5	10	15	19	24
72		27	55	70	31	62	70	4	9	13	18	22
78		25	50	70	29	58	70	4	8	12	16	21
36	108	52	70	70	60	70	70	9	17	26	34	43
42		45	70	70	51	70	70	7	15	22	29	36
48		39	70	70	45	70	70	6	13	19	26	32
54		35	70	70	40	70	70	6	11	17	23	28
60		31	63	70	36	70	70	5	10	15	20	26
66		28	57	70	33	65	70	5	9	14	19	23
72		26	52	70	30	60	70	4	9	13	17	21
78		24	48	70	28	55	70	4	8	12	16	20

TRIBUTARY SIZE		MAX. ANCHOR CAPACITY - DESIGN PRESSURES (+/- PSF)										
MAX. WIDTH 'W'	MAX. SPAN 'L'	ANCHOR TYPE E1	ANCHOR TYPE E2	ANCHOR TYPE E3	ANCHOR TYPE F1	ANCHOR TYPE F2	ANCHOR TYPE F3	ANCHOR TYPE G1	ANCHOR TYPE G2	ANCHOR TYPE G3	ANCHOR TYPE G4	ANCHOR TYPE G5
36	114	49	70	70	56	70	70	8	16	24	32	40
42		42	70	70	48	70	70	7	14	21	28	35
48		37	70	70	42	70	70	6	12	18	24	30
54		33	66	70	38	70	70	5	11	16	21	27
60		30	59	70	34	68	70	5	10	15	19	24
66		27	54	70	31	62	70	4	9	13	18	22
72		25	49	70	28	56	70	4	8	12	16	20
36	120	47	70	70	54	70	70	8	15	23	31	38
42		40	70	70	46	70	70	7	13	20	26	33
48		35	70	70	40	70	70	6	11	17	23	29
54		31	63	70	36	70	70	5	10	15	20	26
60		28	56	70	32	64	70	5	9	14	18	23
66		26	51	70	29	59	70	4	8	13	17	21
36	126	45	70	70	51	70	70	7	15	22	29	36
42		38	70	70	44	70	70	6	12	19	25	31
48		34	67	70	38	70	70	5	11	16	22	27
54		30	60	70	34	68	70	5	10	15	19	24
60		27	54	70	31	61	70	4	9	13	17	22
66		24	49	70	28	56	70	4	8	12	16	20
36	132	43	70	70	49	70	70	7	14	21	28	35
42		37	70	70	42	70	70	6	12	18	24	30
48		32	64	70	37	70	70	5	10	16	21	26
54		28	57	70	33	65	70	5	9	14	19	23
60		26	51	70	29	59	70	4	8	13	17	21
36	138	41	70	70	47	70	70	7	13	20	27	33
42		35	70	70	40	70	70	6	11	17	23	29
48		31	61	70	35	70	70	5	10	15	20	25
54		27	54	70	31	62	70	4	9	13	18	22
60		24	49	70	28	56	70	4	8	12	16	20
36	141.7	40	70	70	45	70	70	6	13	19	26	32
42		34	68	70	39	70	70	6	11	17	22	28
48		30	60	70	34	68	70	5	10	15	19	24
54		26	53	70	30	61	70	4	9	13	17	22
60		24	48	70	27	55	70	4	8	12	16	19
36	144	39	70	70	45	70	70	6	13	19	26	32
42		34	67	70	38	70	70	5	11	16	22	27
48		29	59	70	34	67	70	5	10	14	19	24
54		26	52	70	30	60	70	4	9	13	17	21
36	150	38	70	70	43	70	70	6	12	18	24	31
42		32	64	70	37	70	70	5	10	16	21	26
48		28	56	70	32	64	70	5	9	14	18	23
54		25	50	70	29	57	70	4	8	12	16	20
36	156	36	70	70	41	70	70	6	12	18	24	29
42		31	62	70	35	70	70	5	10	15	20	25
48		27	54	70	31	62	70	4	9	13	18	22
54		24	48	70	28	55	70	4	8	12	16	20
36	162	35	70	70	40	70	70	6	11	17	23	28
42		30	60	70	34	68	70	5	10	15	19	24
48		26	52	70	30	60	70	4	9	13	17	21

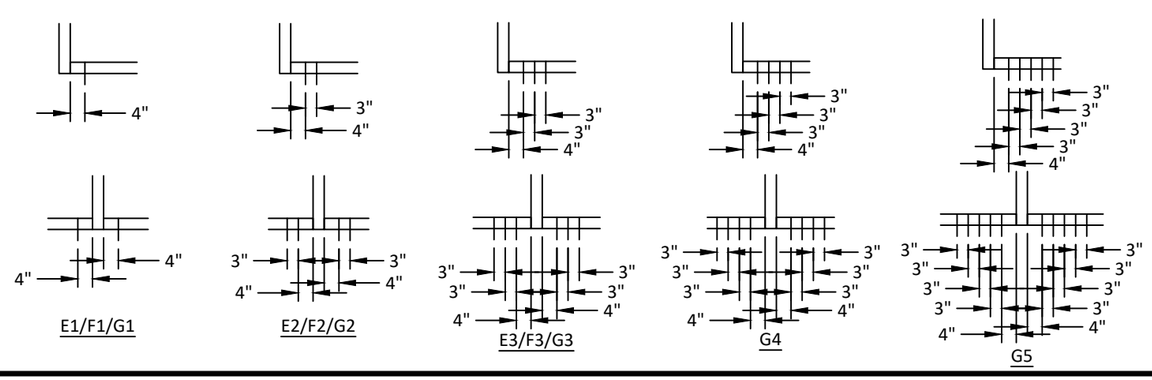

E1/F1/G1 E2/F2/G2 E3/F3/G3 G4 G5

ANCHOR TYPES: SEE SHEET 10 FOR DESCRIPTION
E1/F1/G1: (1) ANCHOR AT JAMB OR EACH SIDE OF MULLION
E2/F2/G2: (2) ANCHORS AT JAMB OR EACH SIDE OF MULLION
E3/F3/G3: (3) ANCHORS AT JAMB OR EACH SIDE OF MULLION
G4: (4) ANCHORS AT JAMB OR EACH SIDE OF MULLION
G5: (5) ANCHORS AT JAMB OR EACH SIDE OF MULLION

Countryside Glass & Mirror
COUNTRYSIDE GLASS & MIRROR, INC.
2650 GANDY BLVD NORTH.
ST. PETERSBURG, FL 33702
PH: (727)738-6000 FAX: (727)738-6100

TITLE: *COUNTRYSIDE ARMOR WALL SINGLE SPAN SYSTEM CS3000 VERSION 23 (WZ3)(IMPACT)*
ANCHOR LAYOUTS & CONSTRUCTION DETAILS

PREPARED BY:
BUILDING DROPS, INC.
1900 NE MIAMI COURT, SUITE 2-15
MIAMI, FL 33132
PH: (954)399-8478
FAX: (954)744.4738
WEB: www.buildingdrops.com

REMARKS	BY	DATE

THE INSTALLATION DETAILS DESCRIBED HERE IN ARE GENERIC AND MAY NOT REFLECT ACTUAL CONDITIONS FOR A SPECIFIC SITE. IF SITE CONDITIONS CAUSE INSTALLATION TO DEVIATE FROM THE REQUIREMENTS DETAILED HEREIN, A LICENSED ENGINEER OR ARCHITECT SHALL PREPARE SITE SPECIFIC DOCUMENTS FOR USE WITH THIS DOCUMENT.

HERMES F. NORERO LICENSE No. 73778 STATE OF FLORIDA PROFESSIONAL ENGINEER

HERMES F. NORERO, P.E.
FLORIDA P.E. No. 73778
BUILDING DROPS, INC
1900 NE MIAMI COURT, SUITE 2-15
MIAMI, FL 33132
FBPE CERT. OF AUTHORIZATION No. 29578

FL #: FL31183
DATE: 08.19.24
DWG. BY: SH
CHK. BY: HFN
SCALE: NTS
DWG. #: CGM015
SHEET: 12 OF 16

8/28/2024 4:44 PM
c:\users\sebastianherreros\building drops, inc\building drops landing - common\projects\countryside glass & mirror, inc\fbc-23-0564 - fl31183 revision - armorwall curtain wall\dwgs\final\cgm015.dwg

SINGLE SPAN
HEAD & SILL - ANCHOR CLIP CAPACITY CHARTS
ANCHOR TYPES A - D

TRIBUTARY SIZE		MAX. ANCHOR CAPACITY - DESIGN PRESSURES (+/- PSF)					
MAX. WIDTH 'W'	MAX. SPAN 'L'	ANCHOR TYPE A1	ANCHOR TYPE B1	ANCHOR TYPE C1	ANCHOR TYPE C2	ANCHOR TYPE D2	ANCHOR TYPE D4
36	84	70	70	70	70	70	70
42		70	70	70	70	70	70
48		70	70	70	70	70	70
54		70	70	70	70	70	70
60		70	70	70	70	69	70
66		70	70	70	70	63	70
72		70	70	70	70	58	70
78		70	70	70	70	53	70
84		70	70	65	70	50	70
36	90	70	70	70	70	70	70
42		70	70	70	70	70	70
48		70	70	70	70	70	70
54		70	70	70	70	70	70
60		70	70	70	70	65	70
66		70	70	70	70	59	70
72		70	70	70	70	54	70
78		70	70	66	70	50	70
84		70	70	61	70	46	70
36	96	70	70	70	70	70	70
42		70	70	70	70	70	70
48		70	70	70	70	70	70
54		70	70	70	70	68	70
60		70	70	70	70	61	70
66		70	70	70	70	55	70
72		70	70	67	70	51	70
78		70	70	62	70	47	70
84		70	70	57	70	43	70
36	102	70	70	70	70	70	70
42		70	70	70	70	70	70
48		70	70	70	70	70	70
54		70	70	70	70	64	70
60		70	70	70	70	57	70
66		70	70	69	70	52	70
72		70	70	63	70	48	70
78		70	70	58	70	44	70
36	103.3	70	70	70	70	70	70
42		70	70	70	70	70	70
48		70	70	70	70	70	70
54		70	70	70	70	63	70
60		70	70	70	70	56	70
66		70	70	68	70	51	70
72		70	70	62	70	47	70
78		70	70	57	70	43	70
36	108	70	70	70	70	70	70
42		70	70	70	70	70	70
48		70	70	70	70	68	70
54		70	70	70	70	60	70
60		70	70	70	70	54	70
66		70	70	65	70	49	70
72		70	70	59	70	45	70
78		70	70	55	70	42	70

TRIBUTARY SIZE		MAX. ANCHOR CAPACITY - DESIGN PRESSURES (+/- PSF)					
MAX. WIDTH 'W'	MAX. SPAN 'L'	ANCHOR TYPE A1	ANCHOR TYPE B1	ANCHOR TYPE C1	ANCHOR TYPE C2	ANCHOR TYPE D2	ANCHOR TYPE D4
36	114	70	70	70	70	70	70
42		70	70	70	70	70	70
48		70	70	70	70	64	70
54		70	70	70	70	57	70
60		70	70	67	70	51	70
66		70	70	61	70	47	70
72		70	70	56	70	43	70
36	120	70	70	70	70	70	70
42		70	70	70	70	69	70
48		70	70	70	70	61	70
54		70	70	70	70	54	70
60		70	70	64	70	49	70
66		70	70	58	70	44	70
36	126	70	70	70	70	70	70
42		70	70	70	70	66	70
48		70	70	70	70	58	70
54		70	70	68	70	51	70
60		70	70	61	70	46	70
66		70	70	55	70	42	70
36	132	70	70	70	70	70	70
42		70	70	70	70	63	70
48		70	70	70	70	55	70
54		70	70	65	70	49	70
60		70	70	58	70	44	70
36	138	70	70	70	70	70	70
42		70	70	70	70	60	70
48		70	70	70	70	53	70
54		70	70	62	70	47	70
60		70	70	56	70	42	70
36	141.7	70	70	70	70	69	70
42		70	70	70	70	59	70
48		70	70	68	70	51	70
54		70	70	60	70	46	70
60		69	70	54	70	41	70
36	144	70	70	70	70	68	70
42		70	70	70	70	58	70
48		70	70	67	70	51	70
54		70	70	59	70	45	70
36	150	70	70	70	70	65	70
42		70	70	70	70	56	70
48		70	70	64	70	49	70
54		70	70	57	70	43	70
36	156	70	70	70	70	62	70
42		70	70	70	70	53	70
48		70	70	62	70	47	70
54		70	70	55	70	42	70
36	162	70	70	70	70	60	70
42		70	70	68	70	51	70
48		70	70	59	70	45	70

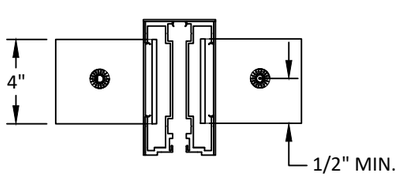

A1/B1/C1

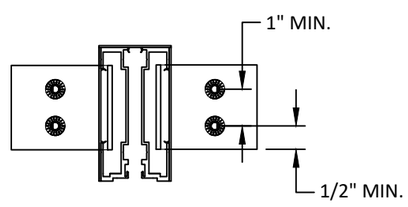

C2/D2

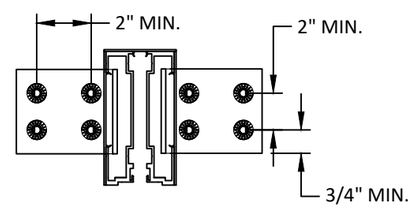

D4

ANCHOR TYPES: SEE SHEET 10 FOR DESCRIPTION
A1/B1/C1: (1) ANCHOR AT JAMB OR EACH SIDE OF MULLION
C2/D2: (2) ANCHORS AT JAMB OR EACH SIDE OF MULLION
D4: (4) ANCHORS AT JAMB OR EACH SIDE OF MULLION

Countryside Glass & Mirror
COUNTRYSIDE GLASS & MIRROR, INC.
2650 GANDY BLVD NORTH.
ST. PETERSBURG, FL 33702
PH: (727)738-6000 FAX: (727)738-6100

TITLE: *COUNTRYSIDE ARMOR WALL SINGLE SPAN SYSTEM CS3000 VERSION 23 (WZ3)(IMPACT)*
ANCHOR CAPACITY CHARTS & DIAGRAMS

PREPARED BY:
BUILDING DROPS, INC.
1900 NE MIAMI COURT, SUITE 2-15
MIAMI, FL 33132
PH: (954)399-8478
FAX: (954)744.4738
WEB: www.buildingdrops.com

REMARKS	BY	DATE

THE INSTALLATION DETAILS DESCRIBED HERE IN ARE GENERIC AND MAY NOT REFLECT ACTUAL CONDITIONS FOR A SPECIFIC SITE. IF SITE CONDITIONS CAUSE INSTALLATION TO DEVIATE FROM THE REQUIREMENTS DETAILED HEREIN, A LICENSED ENGINEER OR ARCHITECT SHALL PREPARE SITE SPECIFIC DOCUMENTS FOR USE WITH THIS DOCUMENT.

HERMES F. NORERO LICENSE No. 73778 STATE OF FLORIDA PROFESSIONAL ENGINEER

HERMES F. NORERO, P.E.
FLORIDA P.E. No. 73778
BUILDING DROPS, INC
1900 NE MIAMI COURT, SUITE 2-15
MIAMI, FL 33132
FBPE CERT. OF AUTHORIZATION No. 29578

FL #: FL31183
DATE: 08.19.24
DWG. BY: SH
CHK. BY: HFN
SCALE: NTS
DWG. #: CGM015
SHEET: 13
OF 16

8/28/2024 4:44 PM
c:\users\sebastianherreros\building drops, inc\building drops landing - common\projects\countryside glass & mirror, inc\fbc-23-0564 - fl31183 revision - armorwall curtain wall\dwgs\final\cgm015.dwg

SINGLE SPAN
HEAD & SILL - ANCHOR CLIP CAPACITY CHARTS
ANCHOR TYPES E - G

TRIBUTARY SIZE		MAX. ANCHOR CAPACITY - DESIGN PRESSURES (+/- PSF)			
MAX. WIDTH 'W'	MAX. SPAN 'L'	ANCHOR TYPE E1	ANCHOR TYPE F1	ANCHOR TYPE G2	ANCHOR TYPE G4
36	84	70	70	62	70
42		70	70	53	70
48		70	70	47	70
54		70	70	41	70
60		70	70	37	70
66		70	70	34	68
72		70	70	31	62
78		70	70	29	57
84		70	70	27	53
36	90	70	70	58	70
42		70	70	50	70
48		70	70	44	70
54		70	70	39	70
60		70	70	35	70
66		70	70	32	63
72		70	70	29	58
78		70	70	27	54
84		70	70	25	50
36	96	70	70	54	70
42		70	70	47	70
48		70	70	41	70
54		70	70	36	70
60		70	70	33	65
66		70	70	30	59
72		70	70	27	54
78		70	70	25	50
84		70	70	23	47
36	102	70	70	51	70
42		70	70	44	70
48		70	70	38	70
54		70	70	34	68
60		70	70	31	61
66		70	70	28	56
72		70	70	26	51
78		70	70	24	47
36	103.3	70	70	51	70
42		70	70	43	70
48		70	70	38	70
54		70	70	34	67
60		70	70	30	61
66		70	70	28	55
72		70	70	25	51
78		70	70	23	47
36	108	70	70	48	70
42		70	70	41	70
48		70	70	36	70
54		70	70	32	64
60		70	70	29	58
66		70	70	26	53
72		70	70	24	48
78		70	70	22	45

TRIBUTARY SIZE		MAX. ANCHOR CAPACITY - DESIGN PRESSURES (+/- PSF)			
MAX. WIDTH 'W'	MAX. SPAN 'L'	ANCHOR TYPE E1	ANCHOR TYPE F1	ANCHOR TYPE G2	ANCHOR TYPE G4
36	114	70	70	46	70
42		70	70	39	70
48		70	70	34	69
54		70	70	31	61
60		70	70	27	55
66		70	70	25	50
72		70	70	23	46
36	120	70	70	44	70
42		70	70	37	70
48		70	70	33	65
54		70	70	29	58
60		70	70	26	52
66		70	70	24	47
36	126	70	70	41	70
42		70	70	36	70
48		70	70	31	62
54		70	70	28	55
60		70	70	25	50
66		70	70	23	45
36	132	70	70	40	70
42		70	70	34	68
48		70	70	30	59
54		70	70	26	53
60		70	70	24	47
36	138	70	70	38	70
42		70	70	32	65
48		70	70	28	57
54		70	70	25	50
60		70	70	23	45
36	141.7	70	70	37	70
42		70	70	32	63
48		70	70	28	55
54		70	70	25	49
60		70	70	22	44
36	144	70	70	36	70
42		70	70	31	62
48		70	70	27	54
54		70	70	24	48
36	150	70	70	35	70
42		70	70	30	60
48		70	70	26	52
54		70	70	23	46
36	156	70	70	33	67
42		70	70	29	57
48		70	70	25	50
54		70	70	22	45
36	162	70	70	32	64
42		70	70	28	55
48		70	70	24	48

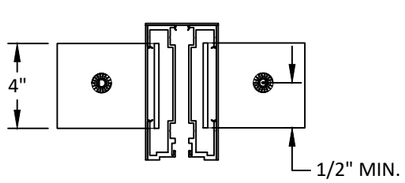

E1/F1

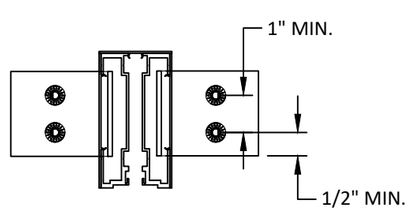

G2

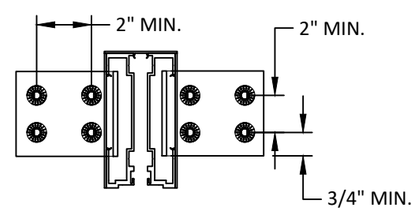

G4

ANCHOR TYPES: SEE SHEET 10 FOR DESCRIPTION
E1/F1: (1) ANCHOR AT JAMB OR EACH SIDE OF MULLION
G2: (2) ANCHORS AT JAMB OR EACH SIDE OF MULLION
G4: (4) ANCHORS AT JAMB OR EACH SIDE OF MULLION

Countryside Glass & Mirror
COUNTRYSIDE GLASS & MIRROR, INC.
2650 GANDY BLVD NORTH.
ST. PETERSBURG, FL 33702
PH: (727)738-6000 FAX: (727)738-6100

TITLE: *COUNTRYSIDE ARMOR WALL SINGLE SPAN SYSTEM CS3000 VERSION 23 (WZ3)(IMPACT)* ANCHOR CAPACITY CHARTS & DIAGRAMS

PREPARED BY:
BUILDING DROPS, INC.
1900 NE MIAMI COURT, SUITE 2-15
MIAMI, FL 33132
PH: (954)399-8478
FAX: (954)744.4738
WEB: www.buildingdrops.com

REMARKS	BY	DATE

THE INSTALLATION DETAILS DESCRIBED HERE IN ARE GENERIC AND MAY NOT REFLECT ACTUAL CONDITIONS FOR A SPECIFIC SITE. IF SITE CONDITIONS CAUSE INSTALLATION TO DEVIATE FROM THE REQUIREMENTS DETAILED HEREIN, A LICENSED ENGINEER OR ARCHITECT SHALL PREPARE SITE SPECIFIC DOCUMENTS FOR USE WITH THIS DOCUMENT.

HERMES F. NORERO LICENSE No. 73778 STATE OF FLORIDA PROFESSIONAL ENGINEER

HERMES F. NORERO, P.E.
FLORIDA P.E. No. 73778
BUILDING DROPS, INC
1900 NE MIAMI COURT, SUITE 2-15
MIAMI, FL 33132
FBPE CERT. OF AUTHORIZATION No. 29578

FL #: FL31183

DATE: 08.19.24

DWG. BY: SH | CHK. BY: HFN

SCALE: NTS

DWG. #: CGM015

SHEET: 14 OF 16

8/28/2024 4:44 PM
c:\users\sebastianherreros\building drops, inc\building drops landing - common\projects\countryside glass & mirror, inc\fbc-23-0564 - fl31183 revision - armorwall curtain wall\dwgs\final\cgm015.dwg

SINGLE SPAN CONSTRUCTION DETAILS

INTEGRATED HORIZONTAL

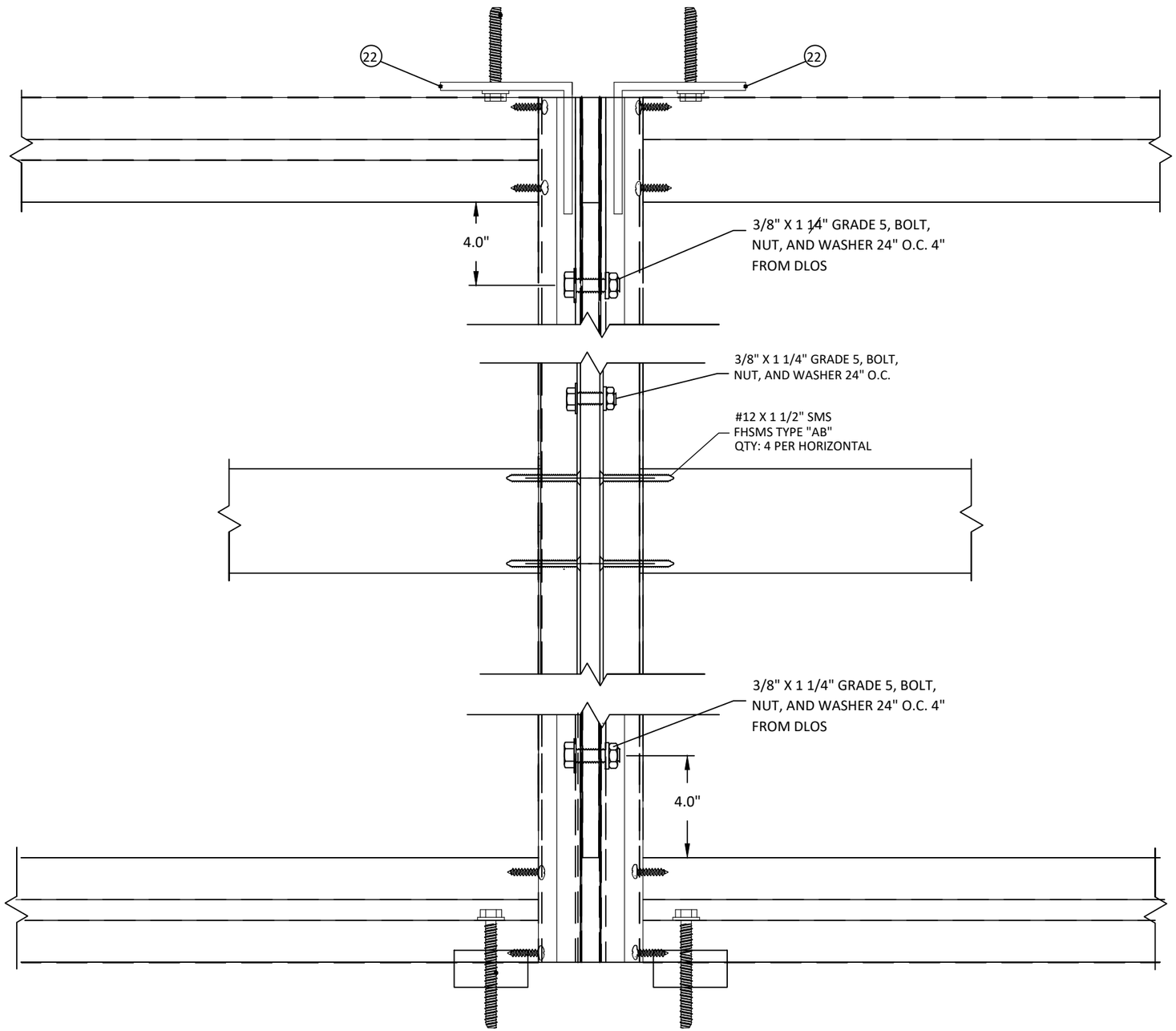

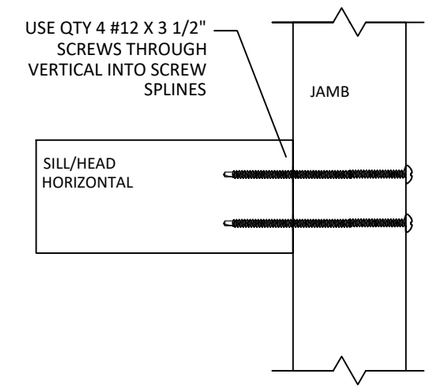

HORIZONTAL CONSTRUCTION

FRONT VIEW

Countryside Glass & Mirror

COUNTRYSIDE GLASS & MIRROR, INC.

2650 GANDY BLVD NORTH.
ST. PETERSBURG, FL 33702
PH: (727)738-6000 FAX: (727)738-6100

TITLE: *COUNTRYSIDE ARMOR WALL SINGLE SPAN SYSTEM CS3000 VERSION 23 (WZ3)(IMPACT)*

WIND LOAD ANCHOR DETAILS

PREPARED BY:

BUILDING DROPS, INC.
1900 NE MIAMI COURT, SUITE 2-15
MIAMI, FL 33132
PH: (954)399-8478
FAX: (954)744.4738
WEB: www.buildingdrops.com

REMARKS	BY	DATE

THE INSTALLATION DETAILS DESCRIBED HERE IN ARE GENERIC AND MAY NOT REFLECT ACTUAL CONDITIONS FOR A SPECIFIC SITE. IF SITE CONDITIONS CAUSE INSTALLATION TO DEVIATE FROM THE REQUIREMENTS DETAILED HEREIN, A LICENSED ENGINEER OR ARCHITECT SHALL PREPARE SITE SPECIFIC DOCUMENTS FOR USE WITH THIS DOCUMENT.

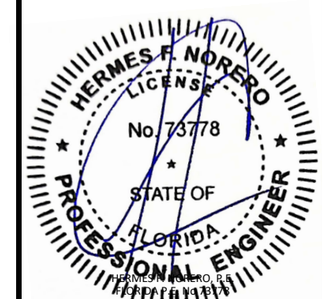

HERMES F. NORERO, P.E.
FLORIDA P.E. No. 73778
BUILDING DROPS, INC
1900 NE MIAMI COURT, SUITE 2-15
MIAMI, FL 33132
FBPE CERT. OF AUTHORIZATION No. 29578

FL #: FL31183

DATE: 08.19.24

DWG. BY: SH

CHK. BY: HFN

SCALE: NTS

DWG. #: CGM015

SHEET: 15

OF 16

8/28/2024 4:44 PM

c:\users\sebastianherreros\building drops, inc\building drops landing - common\projects\countryside glass & mirror, inc\fbc-23-0564 - fl31183 revision - armorwall curtain wall\dwgs\final\cgm015.dwg

BILL OF MATERIALS

ITEM	PART No.	DESCRIPTION	MATERIAL
1	CS-1422	MAIN EXTRUSION	ALUMINUM 6063-T5
2	CS-1423	HORIZONTAL/VERTICAL MULL	ALUMINUM 6063-T5
3	CS-1265	SIDE FILLER	ALUMINUM 6063-T5
4	CS-3118	BACK FILLER	ALUMINUM 6063-T5
5	CS-1425	INTERMEDIATE GLASS CLIP	ALUMINUM 6063-T5
6	CS-1435	PERIMETER GLASS CLIP	ALUMINUM 6063-T5
7	CS-1470	ANCHOR CONNECTOR	ALUMINUM 6063-T5
8	CS-3010	PERIMETER ISOLATER	WHITE UV RIGID PVC
12	V210638	3/16" X 3/8" ISOLATOR TAPE	-
13	V210412	1/8" X 1/2" ISOLATOR TAPE	-
14	-	5/8" BACK ROD	-
15	-	STEEL REINFORCEMENT	STEEL A36
16	-	-	-
17	-	3/8-16 BOLTS @ 24" O.C.	-
18	-	#10X1/2" PH SCREW	-
19	-	-	-
20	CS-1426	OPTIONAL APPLIED CAP	ALUMINUM 6063-T5
21	CS-3009	OPTIONAL APPLIED CAP WEDGE	-
22	-	ANCHOR CLIP	ALUMINUM 6063-T5
23	-	-	-
24	-	-	-
25	-	-	-
26	-	-	-
27	-	#12X1-1/2" SCREW	-
28	-	#12X3-1/2" SCREW	-
29	-	-	-
30	-	3/8" FLAT WASHER	-
31	-	-	-
32	-	-	-
33	-	3/8" LOCK WASHER	-
34	-	-	-

1 MAIN EXTRUSION

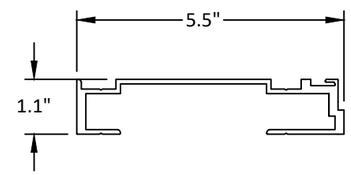

2 HORIZONTAL/VERTICAL MULLION

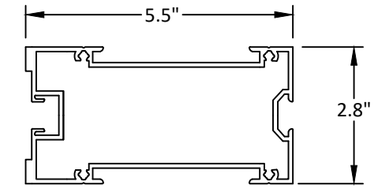

3 SIDE FILLER

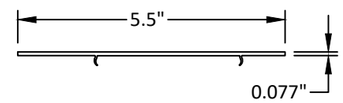

4 BACK FILLER

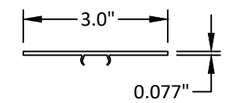

5 INTERMEDIATE GLASS CLIP

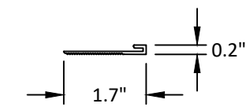

6 PERIMETER GLASS CLIP

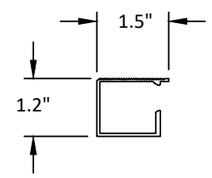

7 ANCHOR CONNECTOR

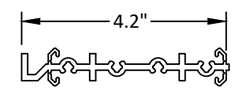

8 PERIMETER ISOLATOR

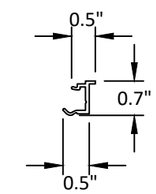

15 STEEL REINFORCEMENT

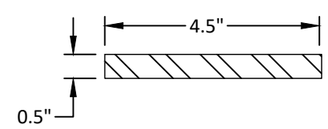

20 OPTIONAL APPLIED CAP

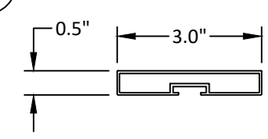

21 OPTIONAL APPLIED CAP WEDGE

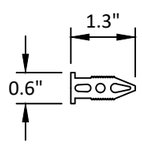

22 ANCHOR CLIP

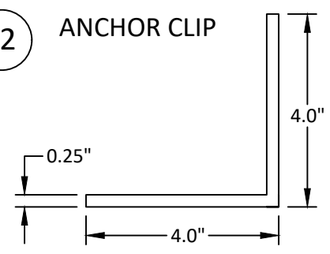

Countryside Glass & Mirror
COUNTRYSIDE GLASS & MIRROR, INC.
2650 GANDY BLVD NORTH.
ST. PETERSBURG, FL 33702
PH: (727)738-6000 FAX: (727)738-6100

TITLE: *COUNTRYSIDE ARMOR WALL SINGLE SPAN SYSTEM CS3000 VERSION 23 (WZ3)(IMPACT)*

BILL OF MATERIAL

PREPARED BY:
BUILDING DROPS, INC.
1900 NE MIAMI COURT, SUITE 2-15
MIAMI, FL 33132
PH: (954)399-8478
FAX: (954)744.4738
WEB: www.buildingdrops.com

REMARKS	BY	DATE

THE INSTALLATION DETAILS DESCRIBED HERE IN ARE GENERIC AND MAY NOT REFLECT ACTUAL CONDITIONS FOR A SPECIFIC SITE. IF SITE CONDITIONS CAUSE INSTALLATION TO DEVIATE FROM THE REQUIREMENTS DETAILED HEREIN, A LICENSED ENGINEER OR ARCHITECT SHALL PREPARE SITE SPECIFIC DOCUMENTS FOR USE WITH THIS DOCUMENT.

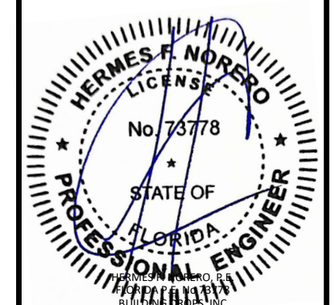

HERMES F. NORERO, P.E.
FLORIDA P.E. No. 73778
BUILDING DROPS, INC
1900 NE MIAMI COURT, SUITE 2-15
MIAMI, FL 33132
FBPE CERT. OF AUTHORIZATION No. 29578

FL #: FL31183

DATE: 08.19.24

DWG. BY: SH | CHK. BY: HFN

SCALE: NTS

DWG. #: CGM015

SHEET: 16 OF 16

8/28/2024 4:44 PM
c:\users\sebastianherreros\building drops, inc\building drops landing - common\projects\countryside glass & mirror, inc\fbc-23-0564 - fl31183 revision - armorwall curtain wall\dwgs\final\cgm015.dwg